SERIES W80

Combi uniten

Combi appliance
Maintenance unit, 2-pieces
Filter, activated-carbon filter, submicron filter
Pressure controller
Mist lubricator
Accessories

Application

Due to the highly developed machines in the industry, the requirements of the compressed air quality are increasing steadily. Therefore maintenance units become more and more important in manufacturing companies.

With a high quality of the compressed air, the function and durability of many machines can be improved very much.

Filters are applied in all cases where the compressed air has to be cleaned from dirt particles, rust, tube sinter and condensed water.

Pressure controllers are applied in all cases where the incoming air has to be regulated to a desired value, which has to be adjusted at the regulator.

Lubricators are applied in all cases where pneumatic tools, pneumatic control units etc. have to be fed with a defined quantity of oil

Features

- newest generation of appliances
- high flow rates
- attractive design (awarded with the iF-seal)
- the same type series available as submicron or activated charcoal filter

Specifications

The specifications are assigned to the individual articles in the catalogue.

type series 0: KU variant for small flow rates in G1/8 and G1/4

type series 1: for low flow rates in G1/4 and G3/8

type series 4: for medium flow rates in G1/2

type series 6: for high flow rates in G1

Compressed-air preparation units

Why compressed-air preparation?

Depending on the type of the compressor as well as on the length and condition of the tube pipeline system the compressed air is impurified with more or less humidity, lubricant residues and other contaminating substances like dirt and rust particles. These impurities are unwanted with all pneumatic applications, since they reduce the performance and the life of the compressed air appliances and render most of the appliances impossible. By using suitable pressure controllers these fluctuations are eliminated and a nearly constant operating pressure is ensured – also with fluctuating flow rates.

A great part of the compressed air appliances – especially compressed air tools – need a sufficient and safe lubrication for a trouble-free operation. The lubricant ensures very little wear and reduces corrosion, i. e. a higher service life (product life) of the pneumatic appliances is reached.

Compressed air filters

The compressed air filters have the function, to separate solid and liquid contaminants from the compressed air. The contamination of the compressed air is mainly humidity, which is caused by the condensation of the water vapour portion over the saturation point (in drop or mist form). The portion of humidity is primarily dependant on the relative air moisture.
A big portion of the atmospheric impurities cannot be retained by the intake filter. Due to the compression these impurities are multiplied.
With filter and water separators solid as well as liquid impurities can be separated. Under the condition that there have not been made any mistakes with the installation, this equipment ensures widely dry and clean compressed air.

Function

The uncleaned compressed air which flows into the filter, is shifted by the deflection ring (1). By means of the centrifugal forces the impurities contained in the air flow – especially the liquid particles – are (centrifuged) dashed against the container wall and flow to the bottom.

The collection area (4) for the separated liquid is separated from the vortex chamber by a baffle plate (3), so that the condensate is not swept along by the air flow.

After the vortex chamber the compressed air flows through a filter element (2) and reaches the outlet. In the filter element all solid particles are retained which have not been separated by the whirling. At the lowest point of the container there is an outlet mechanism for the condensate.

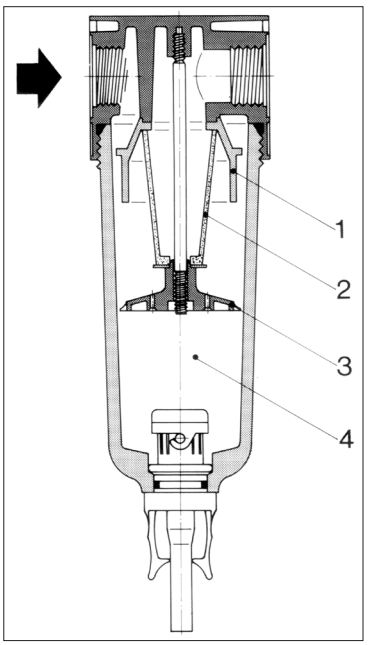

Separation grade

The separation rate indicates how many percent of the humidity contained in the air flow is separated indeed.

Pore size of the filter element

Solid contaminants which are bigger than the pore size are retained in the filter element. All pneumatic filters are serially equipped with 30 micron filter elements (5 micron with series 0), which is sufficient for most application cases in industrial pneumatics. For special requirements for all type series 5 micron filters resp. micron filters are available.

In order to avoid a substantial decrease of pressure the filter element has to be cleaned or exchanged in regular time intervals. The filter elements should only be cleaned with petrol and afterwards it has to be blown out with compressed air from the inside to the outside.

Condensate draining

Hand outlet (standard)

The devices are serially equipped with an outlet valve which is operated manually. At the bottom side you can mount a plastic hose in order to deviate the condensate from splash water areas.

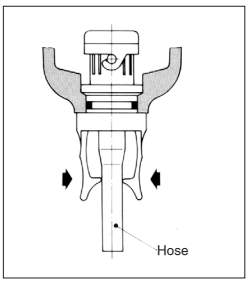

Semi-automatic device

A great part of all filters is used with a semi-automatic device so that even if maintenance is neglected, the container is drained. By actuating the two handle bars also a manual draining is possible.

Function:

As soon as the pressure in the container falls under 0,2 bar, the valve piston (3) is lifted from the valve seat (5) by a pressure spring (6) and the condensate is drained. When the pressure in the container increases again over 0,8 bar the valve closes.

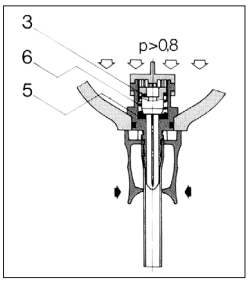

Automatic outlet

The float control provides for the automatic condensate draining when a particular level is reached in the container. The application of the automatic outlet is recommended in all cases where a high condensate level is expected (e.g. in case of a high temperature drop) and where the current maintenance is difficult to carry through, like for example in areas difficult to access.

Function:

The piston (7) is moved upwards by the pressure in the container against the compression spring (8) and closes the valve. When a particular level is reached the pilot valve (1) is opened by the floater (5) and a pressure build-up is effected on top of the piston. With the support of the spring force the valve opens and the condensate is drained. If there are solid contaminants they are retained in the filter sieve (12). When the condensate level has dropped, the pilot valve closes and the excess pressure in the area on top of the piston is released by the nozzle (10). The pressure of the container moves the piston against the spring force and closes the draining process. By the turning of the adjusting screws (13) also the manual draining is possible.

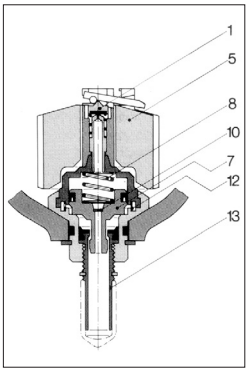

Plastic container

The transparent plastic container is produced under strict safety regulations and has bursting pressures between 100 and 120 bar. In order to maintain the safety characteristics, please pay attention to the allowed areas of application.

Chemicals which corrode the plastic container: acetone, benzene, brake fluid, chloroform, acetic acid, glycerine, methanol, carbon disulfide, tri-, tetra- and per-compounds, toluene, Xylene (nitro dilution), flame resistant synthetic oils. Other corrosive media on request. For safety reasons we recommend to exchange the plastic container and the sight glasses (oilers) in periodical intervals of about 5 years.

Important: For cleaning the container please only use water and common household cleaning agents. In cases where there is contact to the media stated above, it is absolutely necessary to use a metal container. If there is no direct contact, but if the contact cannot be completely excluded (for example in a paint shop), the use of a protective cage is recommended.

Installation instructions

Filter- water separators reach their highest efficiency with a high operation pressure and with a low temperature. For the installation you have to pay attention to the temperature conditions. In no case the filter should be installed directly after the compressor or near the heater. Also in high halls the filter should be installed rather on the bottom than on the top.

Compressed-air preparation units

Submicron filters

Why submircon filters?
The advantages of the energy transfer medium compressed air in most applications are only completely brought to bear when the air shows a particular purity grade. The ambient air contains more than 100 millions dust particles per cubic meter. Most of these particles are smaller than 2 microns and cannot be retained by the intake filter.
With the compressing to e.g. 6 bar this makes a proportion of more than 700 millions dust particles per cubic meter. If you take into account the impurities of the compressor itself (oil, water, abrasion etc.), this can be a serious problem (premature wear, total breakdown, quality loss etc.)
The submicron filter gives you the security to get the optimum compressed-air quality for any application case. Especially developed filter elements guarantee a separation grade of 99,999% (D.O.P.-test). This corresponds to the highest performance values demanded today.

Function

The uncleaned compressed air, after reaching the filter head, flows from the inside to the outside through the 3-level filter element. Larger impurities like scales, rust, etc. are already retained in the preliminary filter(2). In the adjacant filter element (3) of threedimensionally layered borosilicate fibers with a separation grade of 99,9999% any substance is separated which is bigger than 0,01 micron (solid substances, water and oil in form of droplets, particulate material). The separation of very small mass particles can be attributed to the so-called Coalescing Effect which means that, due to the fine layering and the molecular movement (according to “Brown”), bigger droplets are generated and by the air flow they are carried to the outer protection coat (4) of foamed material. There they sink to the bottom (due to gravitational force) and form a wet area. Above that filtered oil-free air streams out of the filter element. By draining off the separated fluid into the container the re-inflow in the air flow is prevented. The automatic draining device which is available on request, guarantees the unfailing draining. Thus the maintenance work is reduced to a minimum.

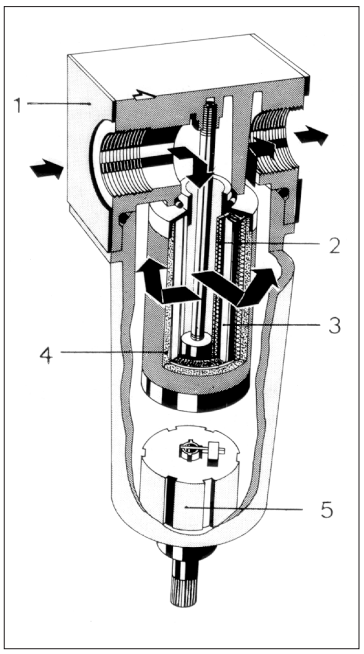

Submicron filters

Connection size: G1/8-G1
Separation grade: 99,9999% D.O.P.
Content of oil residue: 0,01 mg/m3

Micron filters with 3-level coalescence filter are used for the effective filtration of contaminated compressed air. Solid substances bigger than 0.01 micron and fluid impurities in form of particulate material up to a oil residue concentration of 0,01 mg/m3 are separated by means of this filter.
Please note: The service life of the filter element can be considerably extended by installing a preliminary filter. By this means gross impurities are already retained by a regenerative 5-micron filter element made if sinter bronze and thus the efficiency of the micron filter is increased.
Applications: Paint spray systems, pneumatic control units, measuring instruments, vacuum pumps, air bearings, compressed air motors, laundry machines etc.

Activated carbon filter

Connection size: G1/8-G1
Oil residue content: 0,001 mg/m3

Activated carbon filters are used for the effective adsorption of gaseous hydrocarbons (oil steaming) by means of activated carbon up to an oil residue content of 0,001 mg/m3. Oily steams are contained in the compressed air only in very small quantities, but they have an impact on the smell resp. the taste of the media, which get in contact with the compressed air. This series is recommended for all critical application cases, with which only absolutely oil-free and pure compressed air is permissible.
Note: The activated charcoal filter may be connected at the outlet side only to a submicron filter.
Application cases: food industry, breweries, dairies, bottle filling plants, beverage industry, chemical industry, pharmaceutical industry, breathing air, galvanic shop, film laboratories, packaging industry, medical technology etc.

Pressure control valve

The pressure control valves are used for balancing the pressure fluctuations in the compressed air pipework caused by the compressor control and for ensuring a rather constant operational pressure for the compressed air user. The purpose is to prevent pressure fluctuations from getting to the user which would cause unequal cylinder forces and changing torques with rotating pneumatic elements.

Function

The basic principle of all pressure controllers is represented in fig. 1. The valve cone (1) is pressed against the valve seat (2) by means of spring force and interrupts the connection from the primary to the secondary side. Above the secondary area there is a diaphragm (3) or a piston. On its underside works the secondary pressure P2. Above the diaphragm (piston) there is a variable force in form of a pressure spring (4) or a pilot pressure, which counteracts the secondary pressure X of the diaphragm surface.

Fig. 1

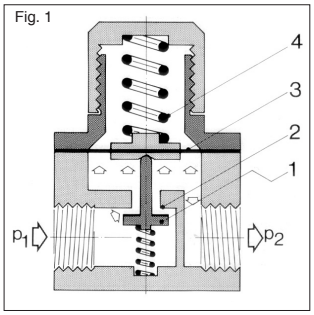

The valve closes, as soon as the force exerted on the bottom side of the diaphragm by the secondary pressure is equal to the spring force. When the secondary pressure decreases due to the escape of air, the spring force outweighs the secondary pressure and the valve opens. It flows as much air until the equilibrium is restored. With increasing air flow and unchanged hand wheel adjustment the spring force decreases. Consequently the adjusted secondary pressure declines. In order to keep this dependence as low as possible, (nearly) **all Timmer pressure controllers have a flow rate balancing** (fig. 2).

Fig. 2

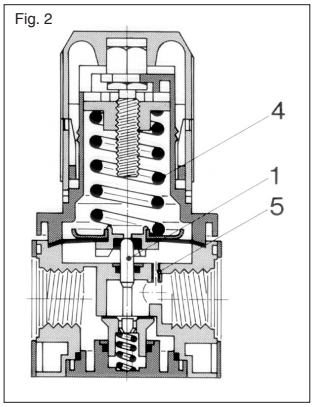

The area below the diaphragm is separated from the secondary side by an intermediate wall and in the air escape duct. there is installed a bottleneck through which the air flows with increased speed rate. At the most narrow point due to the higher speed rate a lower pressure is piped into the diaphragm area via a tube (5). A lower pressure force counteracts against the unchanged spring force and the valve opens more than it would correspond to its actual secondary pressure.

Secondary exhaust (excess pressure safety device)

This prevents an inadmissible pressure increase on the secondary side over the set value. If the pressure increases substantially, the diaphragm is pressed against the spring (4). At the same time the diaphragm raises from the valve piston (1) and compressed air escapes via the exhaust slots of the hand wheel.

Hysteresis

This is the pressure difference between the closing of the valve and the opening of the secondary exhaust with unchanged hand wheel adjustment. So with increasing secondary pressure, the valve closes as soon as the adjusted value is reached, but the secondary exhaust does not open before the value is higher than the hysteresis.

Mist lubricator

Most of the pneumatic devices need oil lubrication for a failure-free operation. This can also decisively extend the life of the consuming devices.

Mist lubricators enrich the passing compressed air with a certain quantity of oil. The generated oil mist then precipitates on the pneumatic devices and effects the lubrication.

Function

Compressed-air lubricators work according to the venturi principle. (fig.1). This means that the pressure difference between the pressure before the air nozzle (A) and the most narrow cross section (B) is used for drawing oil from a container and mixing it with air.

The compressed air flowing through the lubricator generates in the device a pressure drop between the oil container and the oil-dropping area. By this means the oil is pumped upwards in the ascending pipe, where it is added to the air flow – which you can see through a sight glass.

The flow quantity is adjusted via a regulating (flow control) screw.

In nearly all cases it is sufficient to adjust the flow quantity as small as possible, that is about 2-3 drops/min. The refilling of the oil container is also possible under pressure, that means also without interrupting the operation. With unscrewing the filling screw (1) an integral/incorporated valve interrupts the air flow to the oil container and prevents the build-up of pressure. A check valve (2) incorporated in the ascending pipe prevents that oil which has already been pumped in non-operation periods, flows back again into the container. This guarantees a short reaction time of the lubricator after starting the operation.

Fig. 1

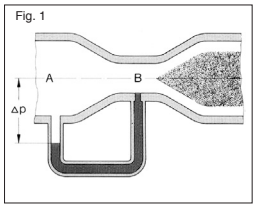

Fig. 2

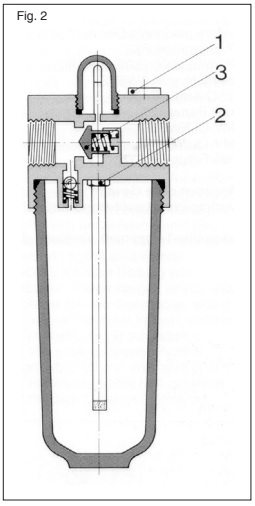

Mixing proportion oil/air

The pressure difference which is necessary for the oil pumping depends on the cross section and on the flow quantity. In order to reach a sufficient oil pumping already with small quantities, but not to produce an over-lubrication with big quantities, the lubricators are serially equipped with a compensation device.

The damming body (3) with springs secures the automatic adaption of the oil quantity to the respective flow quantity.

Recommended oil types

You must not use other oil types than the ones recommended by us with the viscosity classes VG32 according to ISO 3448 (32m2/s with 40°C)

Installation notes

Compressed air lubricators should be installed as near as possible to the consuming device (max 5 to 10 m)

Specifications – series 0 – 1 – 4 – 6

Technical data

typee	: Filter:	With centrifugal force system
	Adjustment:	Diaphragm pressure controller with secondary exhaust
	Öler:	Proportional lubricator
Connection	:	Withworth-tube-thread, cylindrical
Filter pore size	:	*size 0:* 5µm (yellow); with other sizes: 30µm (white)
Condensate draining	:	manual as standard
	On request:	semiautomatic (with pressure release) or fully automatic
Mounting position	:	vertical
Temperature range	:	max. +50°C
Pressure gauge	:	it is supplied with the maintenance unit in depend. from the max. output pressure
Min. pressure difference	:	0,2 bar (*combined unit*)
Oil refilling *(maint. unit:)*	:	*manually, also possible during operation*

	Size 0		Size 1		Size 4	Size 6
Connection size:	G1/8	G1/4	G1/4	G3/8	G1/2	G1
Max. condensate quantity in cm³:	12	12	22	22	60	130
Filter pore size in µm:	5	5	30	30	5	30
Max. oil filling quantity (cm³) *maintenance unit*:	35	35	45	45	30	500
Inlet pressure in bar, primary:	0 - 10		0 - 16		0 - 16	0 - 17,5
Outlet pressure in bar, secondary:	0,5 - 8		0,5 - 8		0,5 - 8	0,5 - 12
Max. flow rate:	Please look at the attribution with the individual articles! - measured with p1=10 bar on p2=6 bar, delta p=1 bar -					

Composition of a special device (example)

- The type description can be composed individually by the user
- The devices are listed in the sequence of the mounting from left to right
- Thread size, pressure range and accessories, (as you can see at the examples) are listed after the devices.

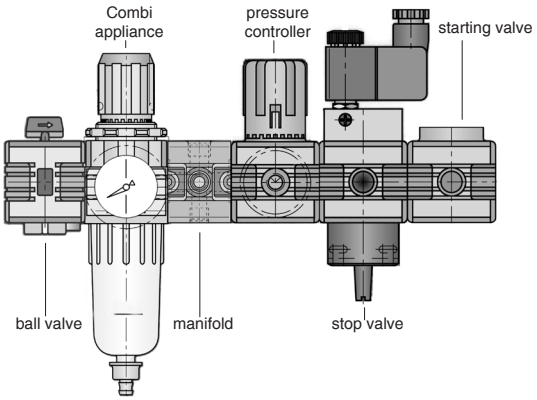

Composition of the type descriptions

Handling instructions

- The combination of several single devices requires the application of coupling sets (WH-ZUB-KUPx)
- The hand wheel of the maintenance unit can be stopped by pressing down.
- Oil refill is possible also under pressure.
- Protective cage can be retrofitted without tools

typee description of a special device

WH - KH-K-VT-R-MV-ANe - 1/2 - 10 - SK

Series

Devices (in the order of its mounting)

Thread

Pressure gauges - pressure range

Accessories
(in the order of its mounting)

Price = device + accessories + coupling sets + mounting per coupling place

Application: maintenance units are used in order to clean the compressed air from dirt particles, rust, tube sinter and condensation water.

At the time when the compressed air is reduced, the lubricator automatically conducts a pre-adjusted quantity of oil mist to the compressed air. Module-maintenance units with oiler are used for compressed air tools, pneumatic control units etc., which are fed with oil.

Complete Device

K : combi-device
KÖ : maintenance unit, 2-pieces Filter regulator / mist lubricator
FRÖ : maintenance unit, 3-pieces filter / regulator / lubricator
F : filter
SMF : submicron filter
AKF : activated charcoal filter
R : diaphragm pressure controller
RP : diaphragm pressure controller with persistant initial supply
RS : diaphragm pressure controller lockable
Ö : mist lubricator
Z : accessories
ET : spare part

System extension

ANe : adjustable starting valve
MV : solenoid valve
KH : ball valve
VT : manifold
ANPV : starting - stop valve combination

Accessories

MBS : metal container with sight glass
MB : metal container
SK : protective cage
M : pressure gauge
HA : semi-automatic condensate drainage
A : automatic condensate outlet
KUP : set of couplings
BW : fastening bracket

Combi unit - WH

consists of: filter regulator – pressure gauge

G1/8 - G3/8

Technical data (please see previous page)

Combi unit - size 0

incl. switch board nut M30x1,5

G1/8 - G1/4
flow rate: G1/8: 667 Nl/min
G1/4: 917 Nl/min

order-no.	type	thread	design	VPE
17960507	WH-K0-1/8-10-M	G1/8	Standard	1
17960500	WH-K0-1/4-10-M	G1/4	Standard	1

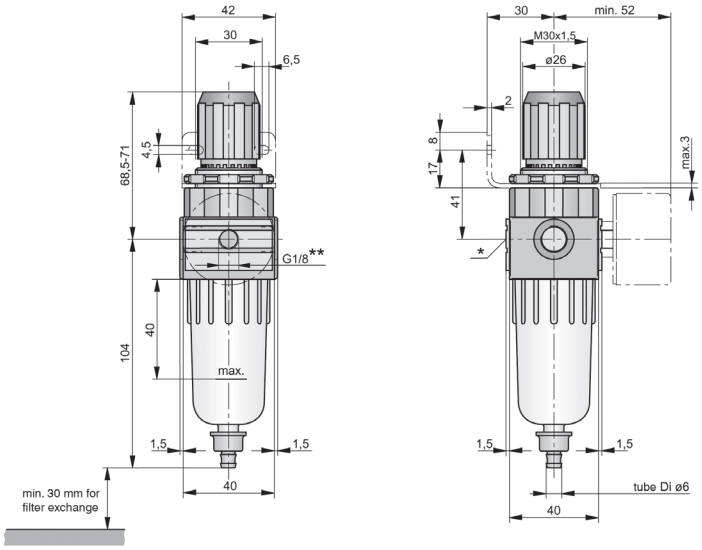

* locking screw is supplied unmounted
** both-sided connection for pressure gauge G1/8

Combi unit - size 1

incl. switch board nut M36x1,5

G1/4 - G3/8
flow rate: G1/4: 2083 Nl/min
flow rate: G3/8: 2667 Nl/min

order-no.	type	thread	design	VPE
17960501	WH-K1-1/4-10-M	G1/4	Standard	1
17960506	WH-K1-1/4-10-MBS-M	G1/4	with metal container – sight glass	1
17960505	WH-K1-1/4-10-A-M	G1/4	with autom. condensate drainage	1
17960533	WH-K1-1/4-10-MBS-A-M	G1/4	with metal container – sight glass and autom. condensate drainage	1
17960502	WH-K1-3/8-10-M	G3/8	Standard	1
17960509	WH-K1-3/8-10-MBS-M	G3/8	with metal container – sight glass	1
17960508	WH-K1-3/8-10-A-M	G3/8	with automatic condensate drainage	1
17960529	WH-K1-3/8-10-MBS-A-M	G3/8	with metal container – sight glass and autom. condensate drainage	1

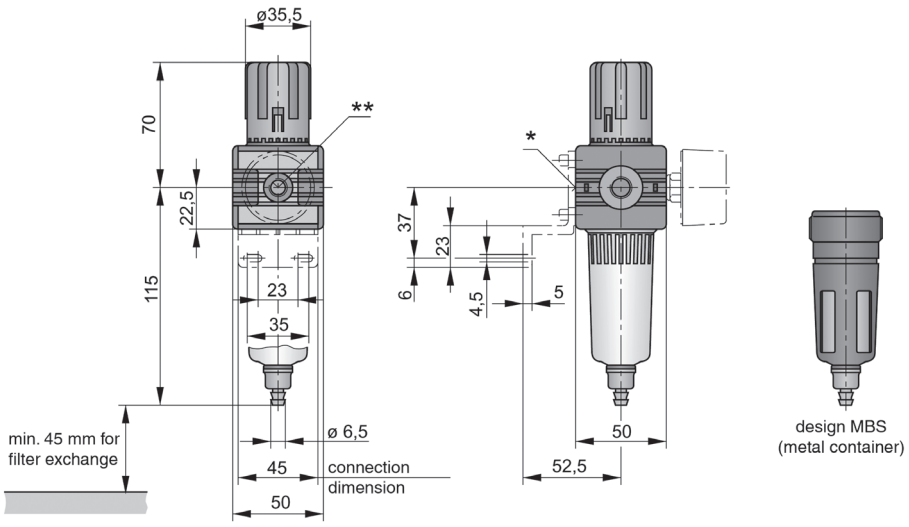

* locking screw is supplied unmounted
** both-sided connection for pressure gauge G1/8

Accessories (s. page 290)

W80

Combi unit - WH

consists of: filter regulator – pressure gauge

G1/2 - G1

Technical data (s. page 311)

Combi unit - size 4

G1/2
flow rate: 6500 Nl/min

order-no.	type	thread	design	VPE
17960810	WH-K4-1/2-10-M	G1/2	Standard	1
17960812	WH-K4-1/2-10-A-M	G1/2	automatic condensate drainage	1

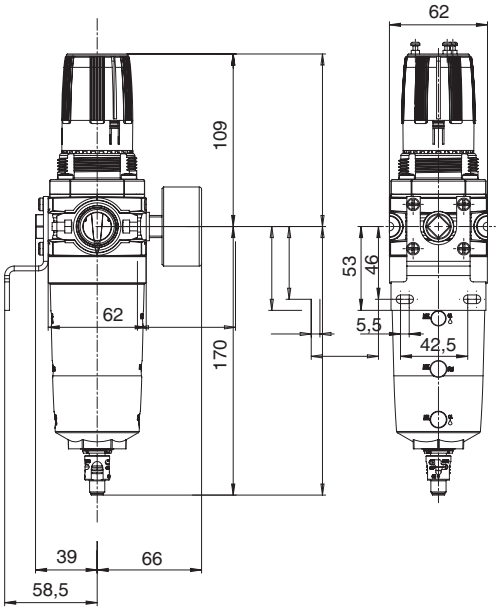

* locking screw is supplied unmounted
** both-sided connection for pressure gauge G1/4

Combi unit - size 6

G1
flow rate: 14000 Nl/min

order-no.	type	thread	design	VPE
17960450	WH-K6-1-10-MBS-M	G1	with metal container – sight glass	1
17960465	WH-K6-1-10-MBS-A-M	G1	with metal container – sight glass and autom. condensate drainage	1

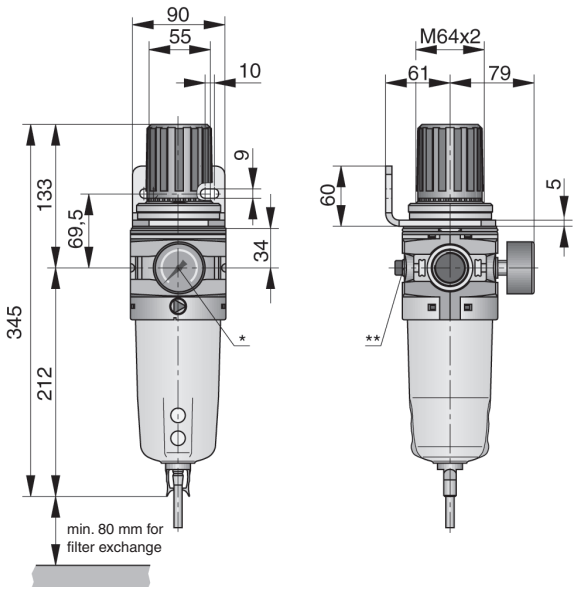

* locking screw is supplied unmounted
** both-sided connection for pressure gauge G1/4

Accessories (s. page 330)

Combi unit - WH - 2-pieces

consists of: combi unit - mist lubricator - pressure gauge

G1/8 - G3/8

Technical data (s. page 311)

Combi unit - size 0

incl. switch board nut M30x1,5

G1/8 - G1/4
flow rate: G1/8: 367 Nl/min
G1/4: 583 Nl/min

order-no.	type	thread	design	VPE
17960540	WH-KÖ0-1/8-10-M	G1/8	Standard	1
17960510	WH-KÖ0-1/4-10-M	G1/4	Standard	1

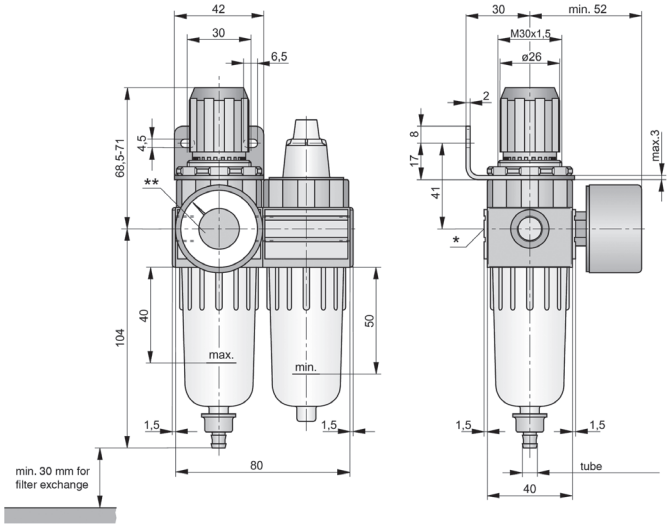

* locking screw is supplied unmounted
** both-sided connection for pressure gauge G1/8

Combi unit - size 1

incl. switch board nut M36x1,5

G1/4 - G3/8
flow rate: G1/4: 917 Nl/min
G3/8: 1000 Nl/min

order-no.	type	thread	design	VPE
17960523	WH-KÖ1-1/4-10-M	G1/4	Standard	1
17960545	WH-KÖ1-1/4-10-MBS-M	G1/4	with metal container – sight glass	1
17960541	WH-KÖ1-1/4-10-A-M	G1/4	with autom. condensate drainage	1
17960543	WH-KÖ1-1/4-10-MBS-A-M	G1/4	with metal container – sight glass and autom. condensate drainage	1
17960524	WH-KÖ1-3/8-10-M	G3/8	Standard	1
17960546	WH-KÖ1-3/8-10-MBS-M	G3/8	with metal container – sight glass	1
17960542	WH-KÖ1-3/8-10-A-M	G3/8	with autom. condensate drainage	1
17960544	WH-KÖ1-3/8-10-MBS-A-M	G3/8	with metal container – sight glass and autom. condensate drainage	1

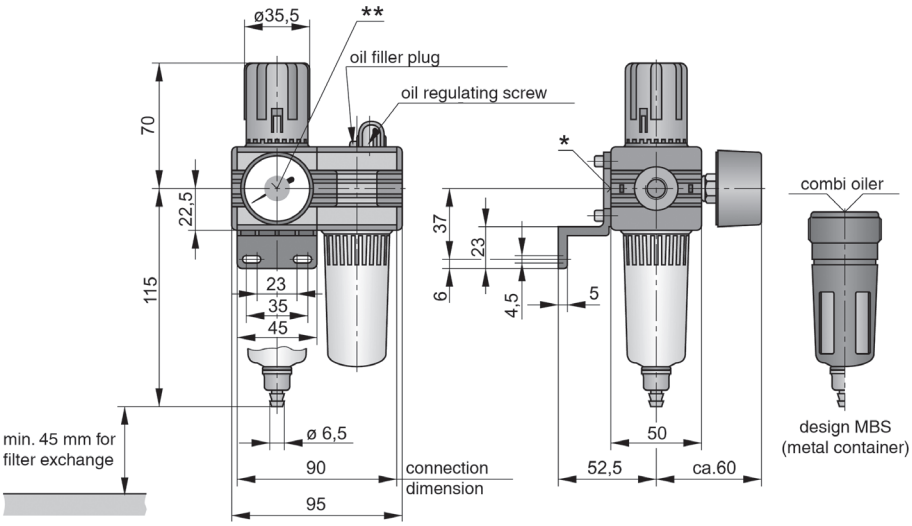

* locking screw is supplied unmounted
** both-sided connection for pressure gauge G1/8

Accessories (s. page 330)

W80

Combi unit - WH - 2-pieces

consists of: Combi unit - mist lubricator - pressure gauge

G1/2 - G1

Technical data (s. page 311)

Combi unit - size 4

G1/2
flow rate: 4500 Nl/min

order-no.	type	thread	design	VPE
17960814	WH-KÖ4-1/2-10-M	G1/2	Standard	1
17960816	WH-KÖ4-1/2-10-A-M	G1/2	with autom. condensate drainage	1

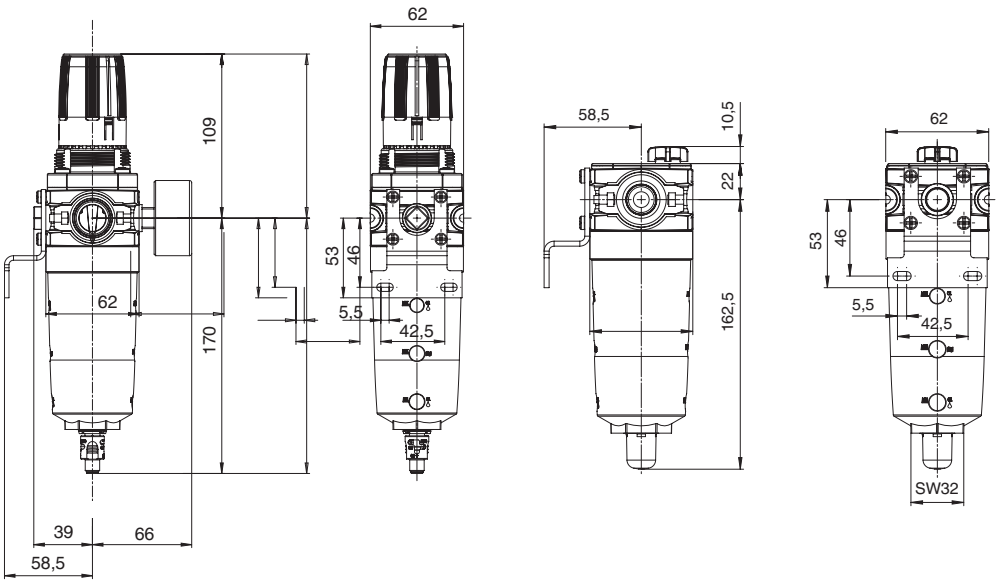

* locking screw is supplied unmounted
** both-sided connection for pressure gauge G1/4

Combi unit - size 6

G1
flow rate: 10000 Nl/min

order-no.	type	thread	design	VPE
17960466	WH-KÖ6-1-10-MBS-M	G1	with metal container – sight glass	1
17960467	WH-KÖ6-1-10-MBS-A-M	G1	with metal container — sight glass and autom. condensate drainage	1

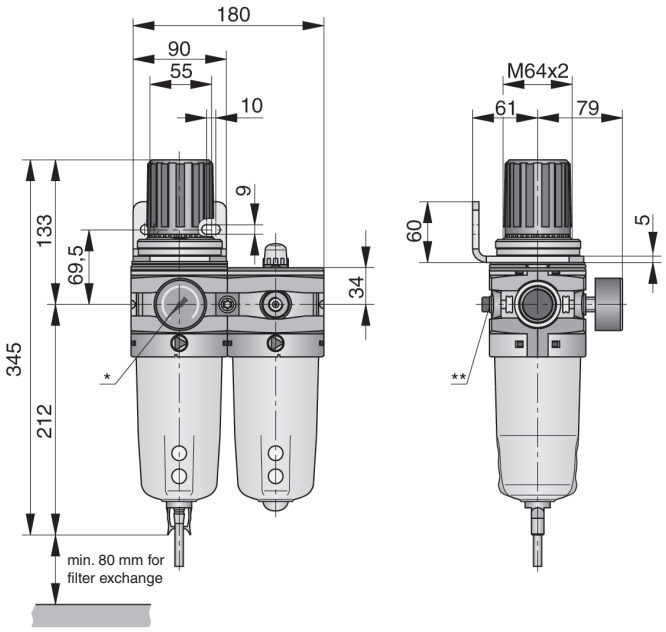

* locking screw is supplied unmounted
** both-sided connection for pressure gauge G1/4

Accessories (s. page 330)

W80

Filter = water separator - WH

G1/8 - G3/8

Technical data (s. page 311)

Filter = water separator - size 0

G1/8 - G1/4
flow rate: G1/8: 833 Nl/min
G1/4: 1083 Nl/min

order-no.	type	thread	design	VPE
17960360	WH-F0-1/8	G1/8	Standard	1
17960309	WH-F0-1/4	G1/4	Standard	1

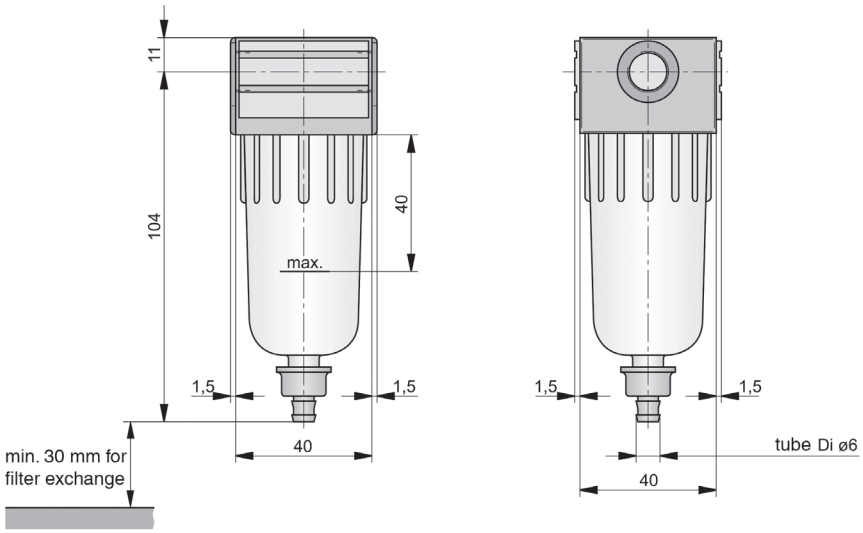

Filter = water separator - size 1

G1/4 - G3/8
flow rate: G1/4: 1500 Nl/min
G3/8: 1667 Nl/min

order-no.	type	thread	design	VPE
17960324	WH-F1-1/4	G1/4	Standard	1
17960364	WH-F1-1/4-MBS	G1/4	with metal container – sight glass	1
17960366	WH-F1-1/4-A	G1/4	with autom. condensate drainage	1
17960368	WH-F1-1/4-MBS-A	G1/4	with metal container — sight glass and autom. condensate drainage	1
17960325	WH-F1-3/8	G3/8	Standard	1
17960365	WH-F1-3/8-MBS	G3/8	with metal container – sight glass	1
17960367	WH-F1-3/8-A	G3/8	with autom. condensate drainage	1
17960369	WH-F1-3/8-MBS-A	G3/8	with metal container — sight glass and autom. condensate drainage	1

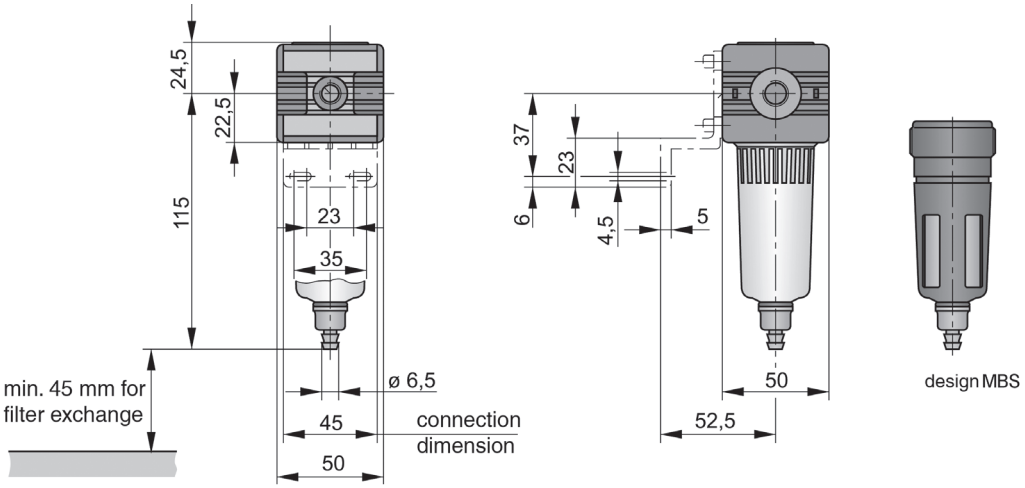

Accessoires (s. page 330)

W80

Filter = water separator - WH

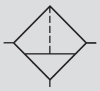

G1/2 - G1

Technical data (s. page 311)

Filter = water separator - size 4

G1/2
flow rate: 5000 Nl/min

order-no.	type	thread	design	VPE
17960817	WH-F4-1/2	G1/2	Standard	1
17960819	WH-F4-1/2-A	G1/2	with autom. condensate drainage	1

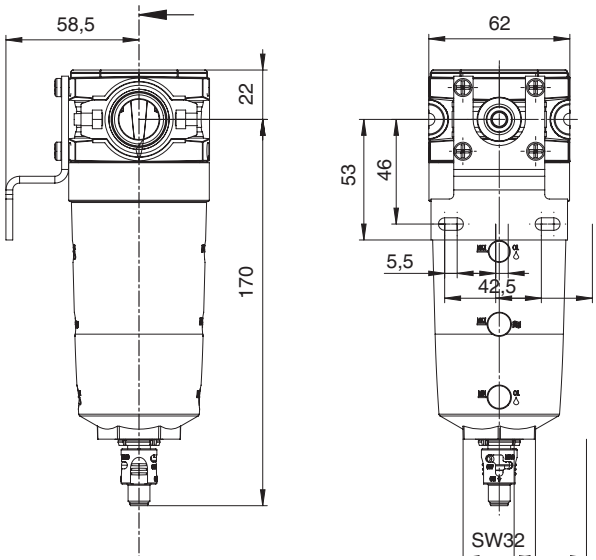

Filter = water separator - size 6

G1
flow rate: 14500 Nl/min

order-no.	type	thread	design	VPE
17960453	WH-F6-1-MBS	G1	with metal container	1
17960468	WH-F6-1-MBS-A	G1	with metal container — sight glass and autom. condensate drainage	1

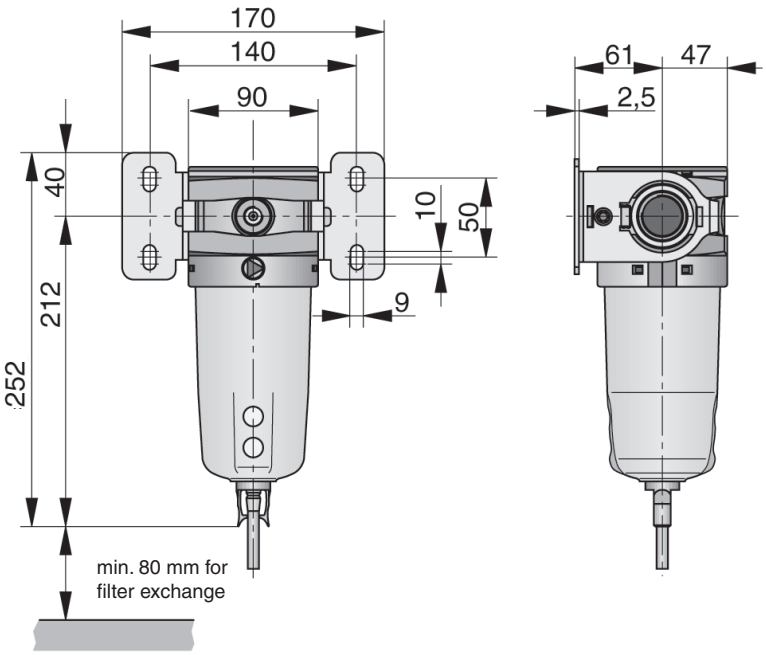

Accessoires (s. page 330)

Pressure controller - WH

consists of: Pressure controller - pressure gauge

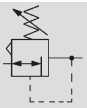

G1/8 - G3/8

Technical data

Type	:	diaphragm pressure controller (series 0: piston pressure controller) with secondary exhaust
Connection	:	Withworth-Rohrgewinde, cylindrical
Mounting position	:	optional
Pressure gauge	:	0 - 10 bar (on request also available 0 - 1 bar, 0 - 3 bar and 0 - 6 bar)
Smallest pressure difference	:	0,2 bar

		size 0	size 1	size 4	size 6
Connection size	:	G1/8 - G1/4	G1/4 - G3/8	G1/2	G1
Temperature range in °C	:	0 - + 50	0 - + 60	0 - + 60	0 - + 60
Inlet presure in bar, primary	:	0 - 10	0 - 16	0 - 16	0 - 16
Outlet pressure in bar, secondary	:	0,5 - 8	0,5 - 8	0,5 - 8	0,5 - 10
max. flow rate	:	*see attribution with the individual articles! - measured with p1=10 bar on p2=6 bar, Δp=1 bar -*			

Pressure controller - size 0

incl. switch board nut M30x1,5

G1/8 - G1/4
flow rate: G1/8: 667 Nl/min
G1/4: 917 Nl/min

order-no.	type	thread	design	VPE
17960532	WH-R0-1/8-10-M	G1/8	Standard	1
17960511	WH-R0-1/4-10-M	G1/4	Standard	1

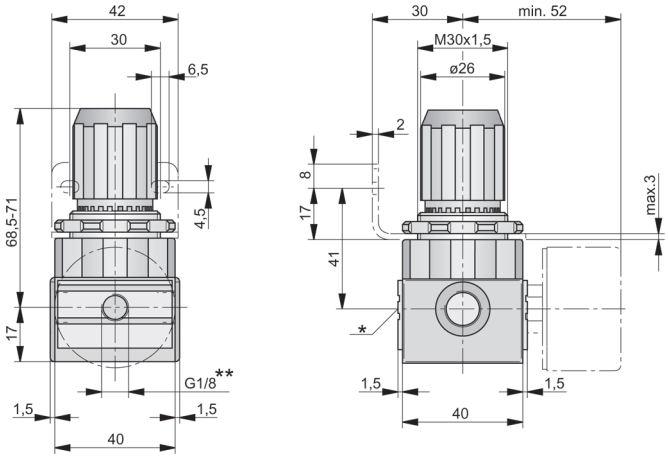

* locking screw is supplied unmounted
** both-sided connection for pressure gauge G1/8

Pressure controller - size 1

incl. switch board nut M36x1,5

G1/4 - G3/8
flow rate: G1/4: 2083 Nl/min
G3/8: 2750 Nl/min

order-no.	type	thread	design	VPE
17960512	WH-R1-1/4-10-M	G1/4	Standard	1
17960514	WH-RS1-1/4-10-M	G1/4	With adapter for key lock mounting (without lock)	1
17960513	WH-R1-3/8-10-M	G3/8	Standard	1
17960515	WH-RS1-3/8-10-M	G3/8	With adapter for key lock mounting (without lock)	1

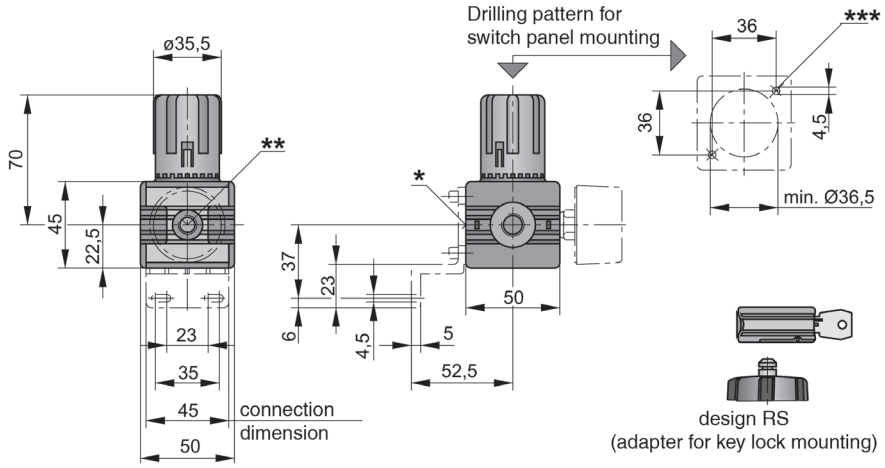

* locking screw is supplied unmounted
** both-sided connection for pressure gauge G1/8
***for threaded screw M4, DIN 7500 - screw-in depth max. 10mm

Accessoires (s. page 330)

W80

Diaphragm-Pressure controller - WH

G1/2 - G1

consists of: Pressure controller - pressure gauge

Technical data (s. page 311)

Pressure controller - size 4

G1/2
flow rate: 7300 Nl/min

order-no.	type	thread	design	VPE
17960823	WH-R4-1/2-10-M	G1/2	Standard	1
17960824	WH-RS4-1/2-10-M	G1/2	With adapter for key lock mounting (without lock)	1

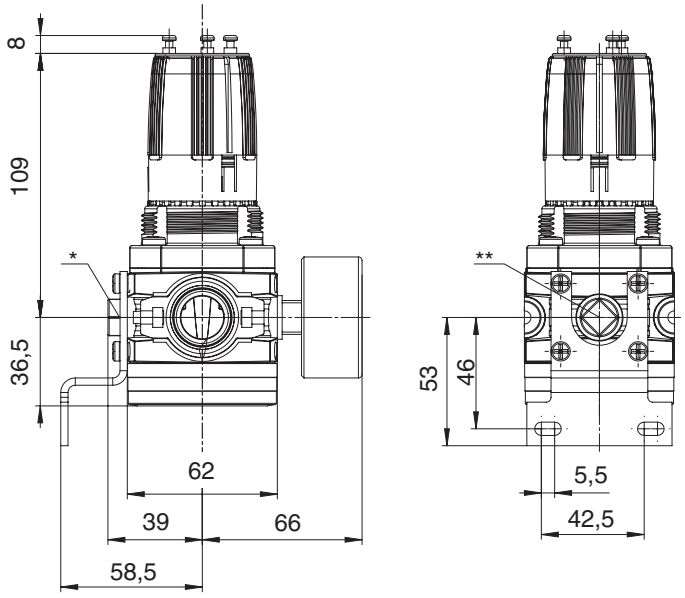

* Verschlussschraube wird unmontiert geliefert
** beidseitiger pressure gauge connection G1/4

Pressure controller - size 6

G1
flow rate: 13500 Nl/min

order-no.	type	thread	design	VPE
17960451	WH-R6-1-10-M	G1	Standard	1
17960452	WH-RS6-1-10-M	G1	With adapter for key lock mounting (without lock)	1

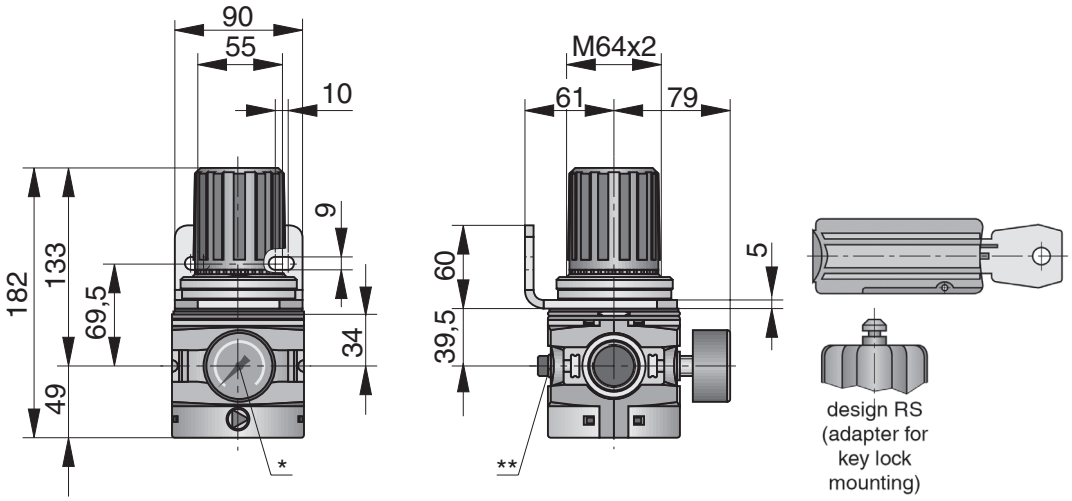

* locking screw is supplied unmounted
** both-sided connection for pressure gauge G1/4

Accessoires (s. page 330)

Mist lubricator - WH

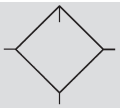

G1/8 - G3/8

Technical data

Type	:	proportional lubricator
Connection	:	Withworth-tube thread, cylindrical
Mounting position	:	vertical
Temperature range	:	max. 50°C
Mixing proportion oil/air	:	degressive (number of drops per min. remains more or less constant)
Oil refill	:	manually

		size 0	size 1	size 4	size 6
Connection size	:	G1/8 - G1/4	G1/4 - G3/8	G1/2	G1
max. oil filling quantity in cm³	:	35	45	90	500
Operating pressure range in bar	:	0-10	0-16	0-16	0-10
max. flow rate		*see attribution to the individual articles!*			

- measured with p1=10 bar on p2=6 bar, Δp=1 bar -

Mist lubricator - size 0

G1/8 - G1/4
flow rate: G1/8: 917 Nl/min
G1/4: 1250 Nl/min

order-no.	type	thread	design	VPE
17960361	WH-Ö0-1/8	G1/8	Standard	1
17960301	WH-Ö0-1/4	G1/4	Standard	1

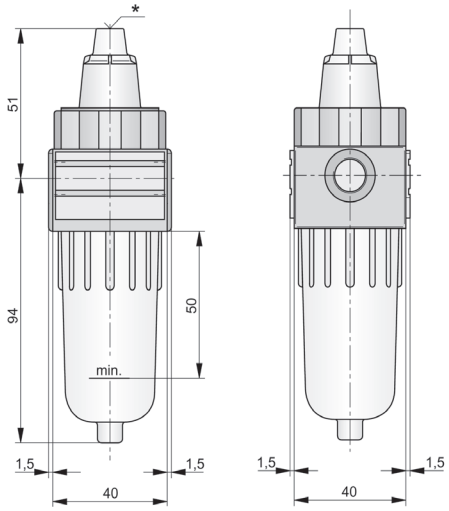

* Öl-Regulierschraube

Mist lubricator - size 1

G1/4 - G3/8
flow rate: G1/4: 1750 Nl/min
G3/8: 1833 Nl/min

order-no.	type	thread	design	VPE
17960307	WH-Ö1-1/4	G1/4	Standard	1
17960530	WH-Ö1-1/4-MBS	G1/4	with metal container	1
17960308	WH-Ö1-3/8	G3/8	Standard	1
17960531	WH-Ö1-3/8-MBS	G3/8	with metal container	1

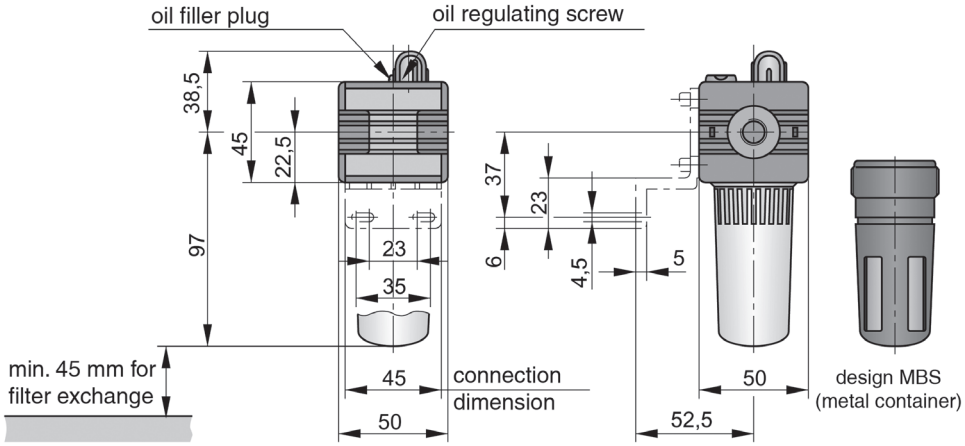

Accessoires (s. page 330)

Technical data (s. page 306)

Mist lubricator - size 4

G1/2
flow rate: 5300 Nl/min

order-no.	type	thread	design	VPE
17960826	WH-Ö4-1/2	G1/2	Standard	1

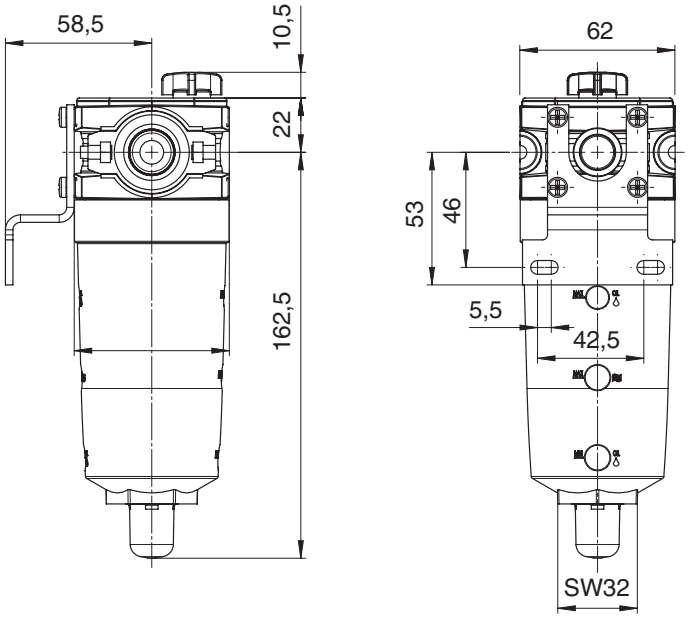

Mist lubricator - size 6

design: with metal container

G1
flow rate: 18000 Nl/min

order-no.	type	thread	design	VPE
17960454	WH-Ö6-1-MBS	G1	with metal container – sight glass	1

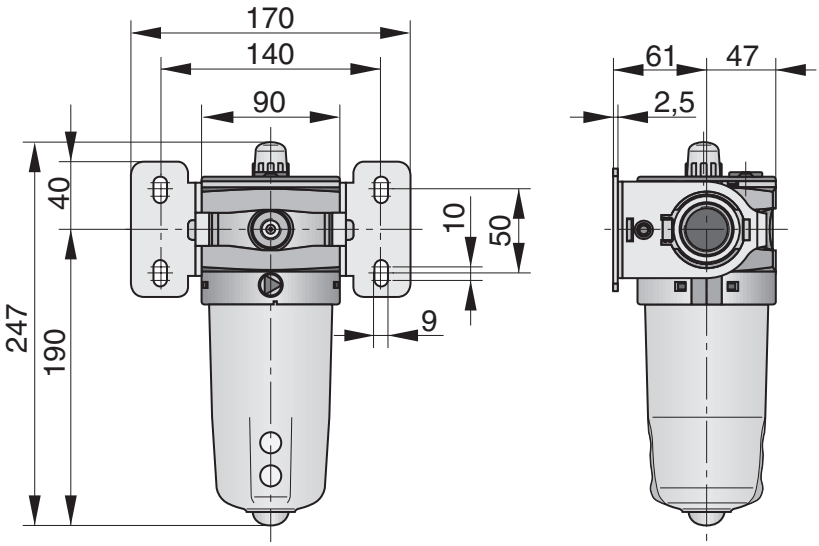

W80

Accessoires (s. page 330)

Submicron filter - WH
Activated carbon filter - WH

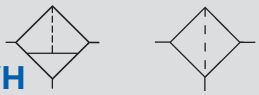

G1/4 - G3/8

Technical data

Type	: Submicron filter - Activated carbon filter
Connection	: Withworth-Rohrgewinde, cylindrical
Condensate draining	: hand operated, on request semi-automatic or fully automatic (size 1-6)
Mounting position	: vertical, container bottom down

		size 0	size 1	size 4	size 6
Connection size	:	G1/8 - G1/4	G1/4 - G3/8	G1/2	G1
Max. condensate quantity in cm^3	Submicron filter :	12	13	48	155
Temperature range in °C	Submicron filter :		0 - + 50		
	Activated carbon filter :		*0 - + 40*		
Operating pressure in bar	:	0-10	0-16	0-16	0-10
Separation grade	Submicron filter :	better than 99,99999%			
Oil residue in mg/m^3	Submicron filter :	<0,01			
	Activated carbon filter :	*0,003 p.p.m in combination with submicron filter*			
Recommended flow rate for optimal separation grade (Nl/min):		350	580	1070	3850

Submicron filter / Activated carbon filter - size 0

G1/4
recommended flow rate:
350 Nl/min

order-no.	type	thread	design	VPE
17960331	WH-SMF0-1/4	G1/4	Submikrofilter	1
17960332	WH-AKF0-1/4	G1/4	Aktivkohlefilter	1

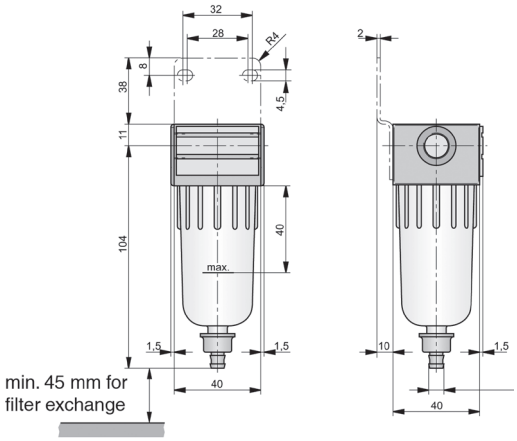

Submicron filter / Activated carbon filter - size 1

G1/4 - G3/8
recommended flow rate:
G1/4 - G3/8: 580 Nl/min

order-no.	type	thread	design	VPE
17960333	WH-SMF1-1/4	G1/4	Submikrofilter	1
17960335	WH-AKF1-1/4	G1/4	Aktivkohlefilter	1
17960334	WH-SMF1-3/8	G3/8	Submikrofilter	1
17960336	WH-AKF1-3/8	G3/8	Aktivkohlefilter	1

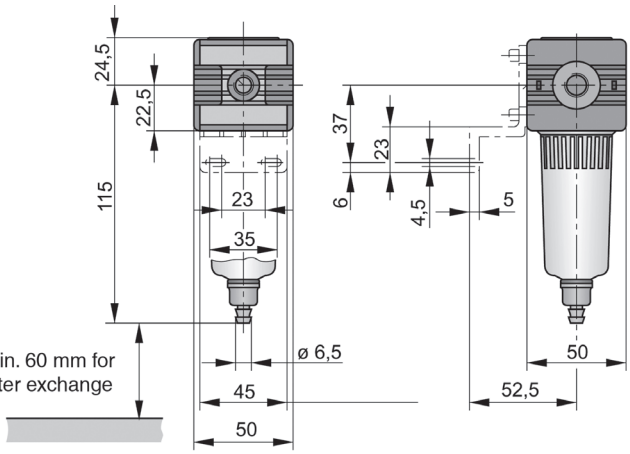

Accessoires (s. page 330)

W80

Submicron filter - WH
Activated carbon filter - WH

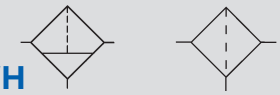

G1/2 - G1

Technical data (s. page 311)

Submicron filter / Activated carbon filter - size 4

G1/2
recommended flow rate: 1070 Nl/min

order-no.	type	thread	design	VPE
17960820	WH-SMF4-1/2-SI	G1/2	Submikrofilter	1
17960821	WH-AKF4-1/2	G1/2	Aktivkohlefilter	1

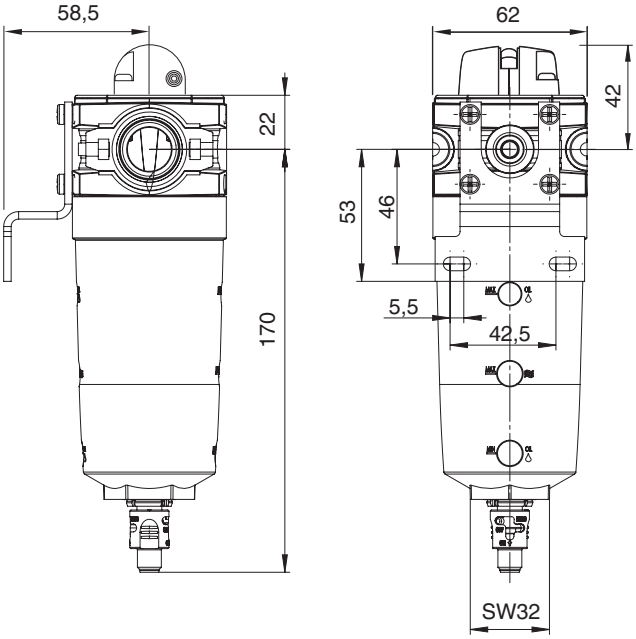

Submicron filter / Activated carbon filter - size 6

G1
recommended flow rate: 3850 Nl/min

order-no.	type	thread	design	VPE
17960456	WH-SMF6-1-MBS	G1	Submikrofilter	1
17960457	WH-AKF6-1-MBS	G1	Aktivkohlefilter	1

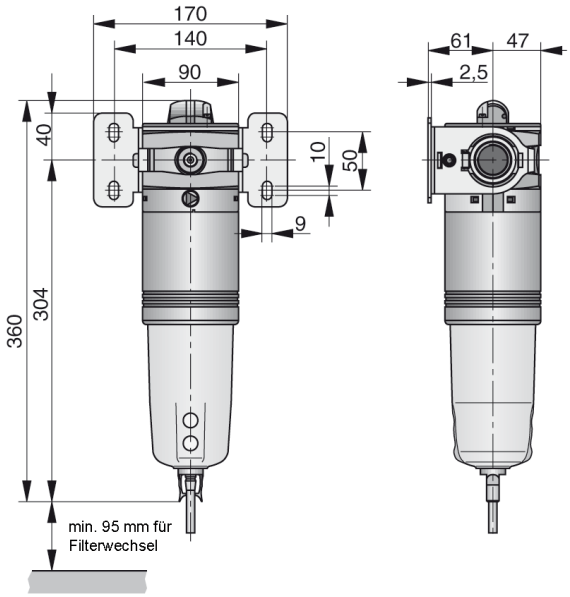

W80

Accessoires (s. page 330)

Diaphragm-Pressure controller - with continuous P1 supply - WH
G1/4 - G1/2 inkl. pressure gauge

Technical data (s. page 306)

Application: Pressure controllers with permanent P1-supply are needed for applications, which require different outlet pressures. The pressure controllers can be mounted series-connected. The outlet with these appliances is situated on the opposite side of the pressure gauge.

Installation notes for the battery

Accessoires (s. page 330)

Pressure controller - size 1
with continous P1-supply

G1/4 - G3/8
flow rate: G1/4: 2583 Nl/min
G3/8: 2583 Nl/min

order-no.	type	thread	design	VPE
17960516	WH-RP1-1/4-10-M	G1/4	with permanent P1-supply	1
17960517	WH-RP1-3/8-10-M	G3/8	with permanent P1-supply	1

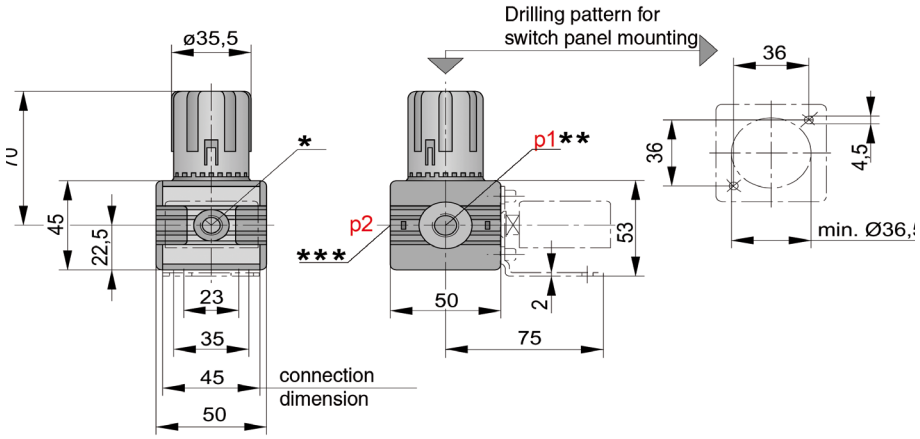

* pressure gauge connection G1/8
** p1 permanent
*** p2 connection G1/4

Pressure controller - size 3
with permanent P1-supply

G1/2
flow rate: 4333 Nl/min

order-no.	type	thread	design	VPE
17960520	WH-RP3-1/2-10-M	1/2	with permanent P1-supply	1

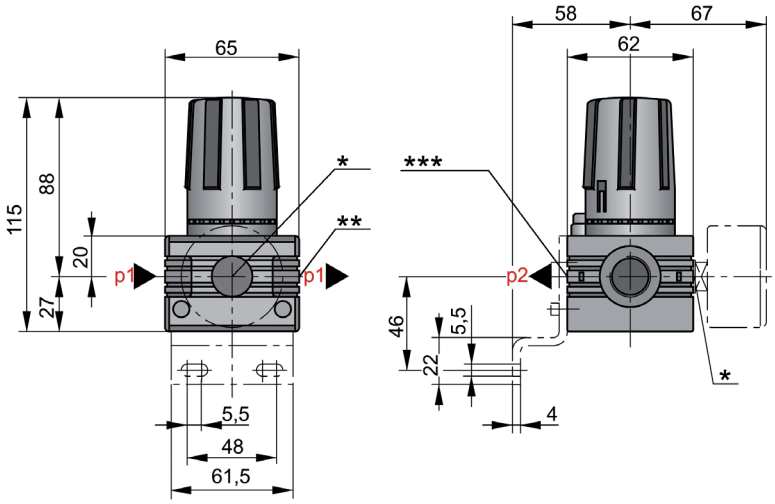

* pressure gauge connection G1/4
** p1 permanent
*** p2 connection G1/2

W80

Starting valve - adjustable - WH

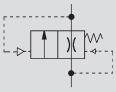

G1/4 - G1/2

Series W80

Technical data (s. page 306)

Application: The adjustable starting valve is used with pneumatic systems where an uncontrolled movement of driving elements (e.g. cylinder) must be avoided.

Function: By means of a build-in throttle a slow pressure build-up is effected when the compressed air is supplied. Only when 50% of the adjusted end pressure is reached, the starting valve switches to full passage.

Starting valve - size 1

design: adjustable

G1/4 - G3/8
flow rate: G1/4: 1600 Nl/min
G3/8: 1667 Nl/min

order-no.	type	thread	design	VPE
17960337	WH-ANe1-1/4	G1/4	einstellbar	1
17960338	WH-ANe1-3/8	G3/8	einstellbar	1

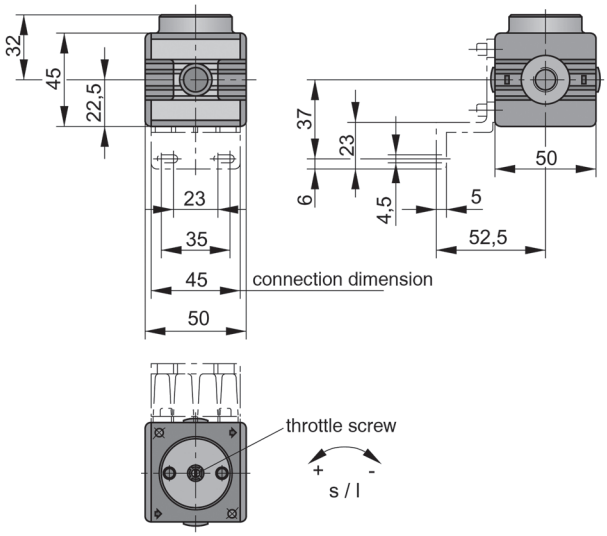

Starting valve - size 3

design: adjustable

G1/2
flow rate: 3700 Nl/min

order-no.	type	thread	design	VPE
17960347	WH-ANe3-1/2	G1/2	einstellbar	1

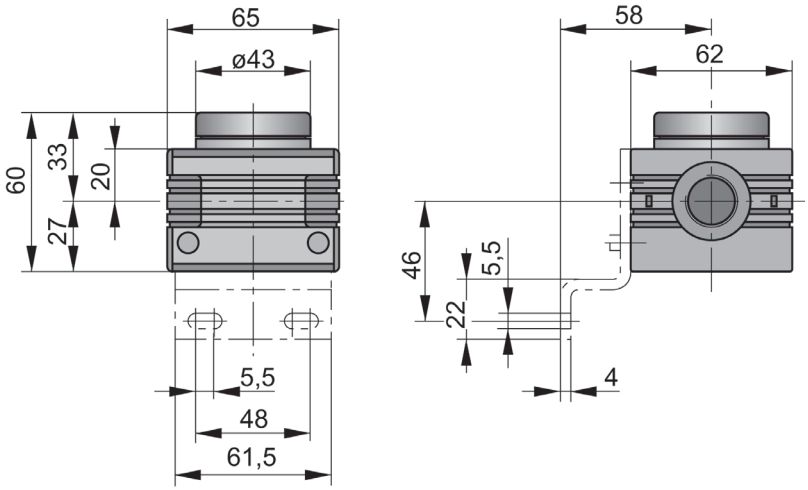

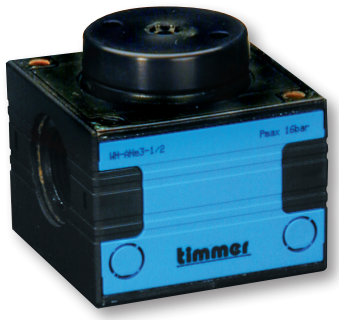

W80

Accessoires (s. page 330)

Solenoid valve
(Stop valve) - 3/2-way - WH

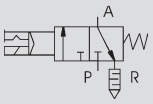

G1/4 - G1/2

Technical data (s. page 306)

Application: Solenoid valves are used in maintenance units in order to switch the compressed air supply on and off. The compressed air is exhausted currentless by means of a silencer.

Consists of:
- solenoid valve
- coil- protection class IP 65 (P54) according to DIN 40 050 (nominal voltages see table)
- electrical connection – coupling socket according to DIN 43650, form B, PG 9

Alternative versions: Pneumatic control available on request
Min. switching pressure: min. 2 bar

3/2 way Solenoid valve - size 1
incl. coil and plug

G1/4 - G3/8
flow rate: G1/4: 1500 Nl/min
G3/8: 1667 Nl/min

order-no.	type	thread	design	VPE
17960340	WH-MV1-1/4-230/50	G1/4	220/50	1
17960339	WH-MV1-1/4-24V=	G1/4	24V=	1
17960341	WH-MV1-3/8-230/50	G3/8	220/50	1
17960342	WH-MV1-3/8-24V=	G3/8	24V=	1

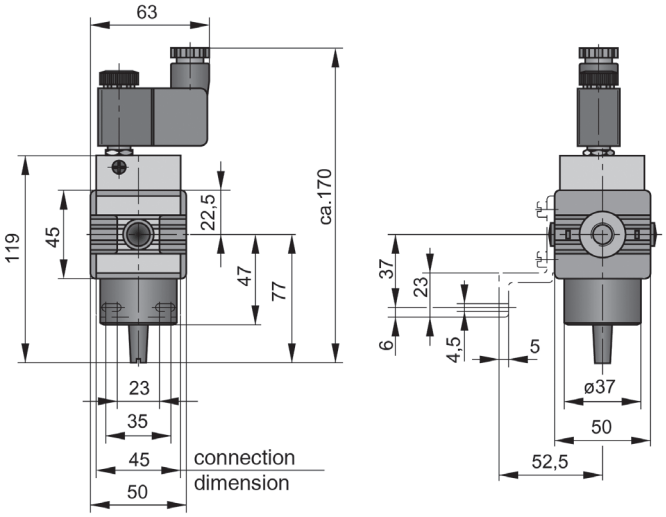

3/2 way Solenoid valve - size 4
incl. coil and plug

G1/2
flow rate: 4800 Nl/min

order-no.	type	thread	design	VPE
17960877	WH-MV4-1/2-230/50	G1/2	230/50	0
17960876	WH-MV4-1/2-24V=	G1/2	24V=	0

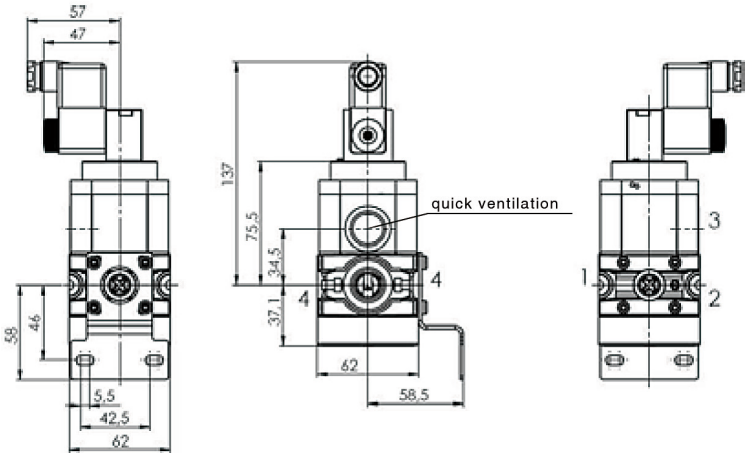

Accessoires (s. page 330)

W80

Technical data (s. page 306)

Application: The combined start-stop valve combines a start and a stop valve in one appliance. The start valve is used for the slow pressure build-up, the stop function for exhausting pneumatic systems. The pressure build-up time is adjustable.

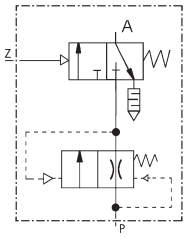

Starting-stop valve-combination - size 6 G1

design: standard **flow rate: 16000 Nl/min**

order-no.	type	thread	design	VPE
17960455	WH-ANPV6-1	G1	Standard	1

Dimensions

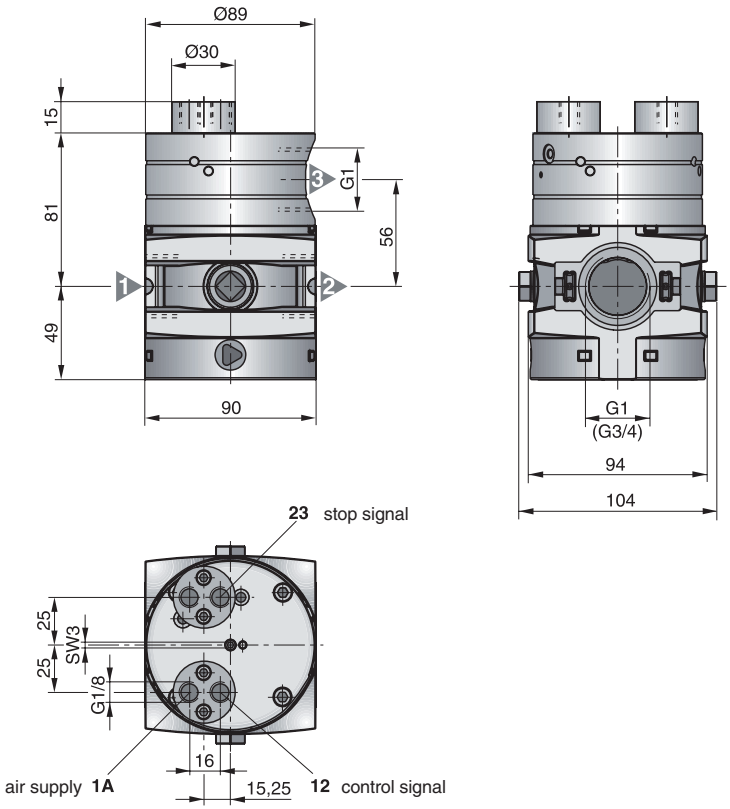

Accessoires (s. page 330)

Ball valve
(check valve) - 3/2-way - WH

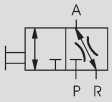

G1/4 - G1

Application: Ball valve with secondary exhaust for blocking the compressed air from the equipment. In case the exhaust is not desired, the connection R after removing the silencer can be closed with a 1/8" closing plug. If a pipeline has to be secured against unauthorized access, the ball valve can be locked by a U-type lock (KH1 a. KH3)

3/2 way-Ball valve - size 1

G1/4 - G3/8
flow rate: G1/4: 2500 Nl/min
G3/8: 2600 Nl/min

order-no.	type	thread	design	VPE
17960344	WH-KH1-1/4	G1/4	Standard	1
17960362	WH-KH1-3/8	G3/8	Standard	1

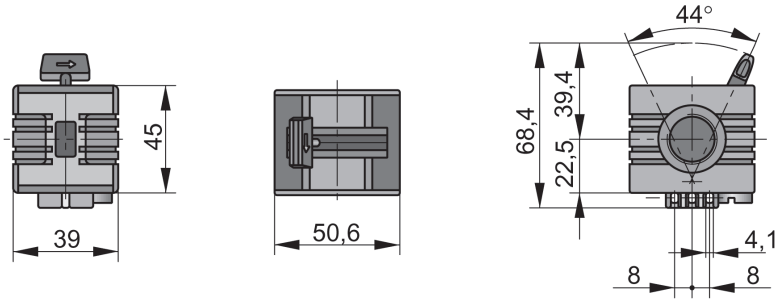

3/2 way-Ball valve - size 4

G1/2
flow rate: 7500 Nl/min

order-no.	type	thread	design	VPE
17960832	WH-KH4-1/2	G1/2	Standard	1

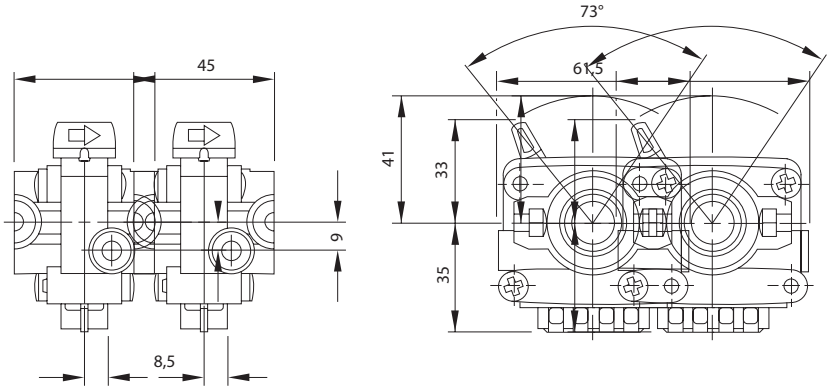

3/2 way-Ball valve - size 6

G1
flow rate: 20000 Nl/min

order-no.	type	thread	design	VPE
17960458	WH-KH6-1	G1	Standard	1

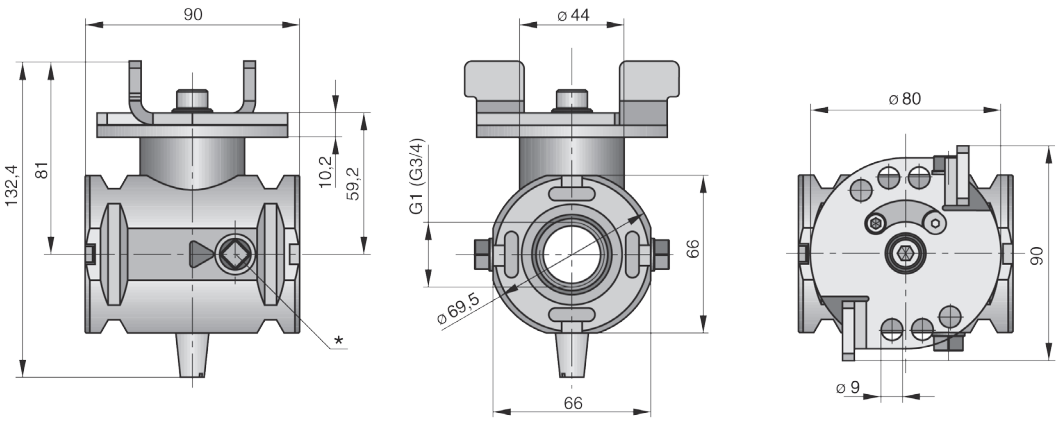

Accessoires (s. page 330)

W80

Manifold - WH G1/4 - G1

Application: Manifolds are used as intermediate piece for the extraction of unoiled or unregulated compressed air. The installation should be made before the mist lubricator and after the compressed air filter.

Technical data

Type	: cross manifold
Connection	: G1/4 - G1 - Withworth tube thread, cylindrical
Pressure range	: max. 16 bar
Temperature range	: max. + 60°C
Mounting position	: optional
Fastening	: direct flange mounting

Manifold - size 0 G1/4

order-no.	type	thread	design	VPE
17960328	WH-VT0-1/4	G1/4	Standard	1

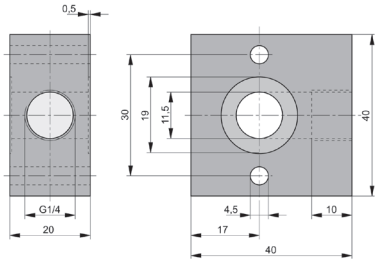

Manifold - size 1 G1/4

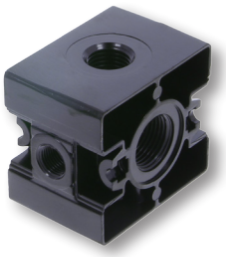

order-no.	type	thread	design	VPE
17960343	WH-VT1-1/4-3/8	G1/4	Standard	1

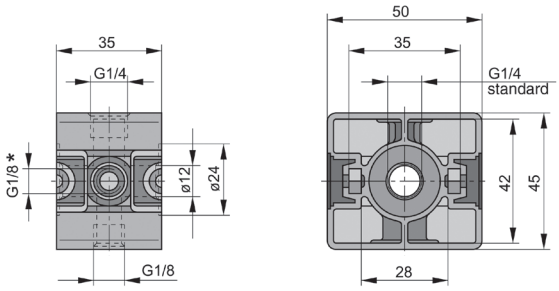

*both-sided thread G1/8 prepared for boring Ø 4/ thread depth generally 10 mm.

Manifold - size 4 G1/2

order-no.	type	thread	design	VPE
17960834	WH-VT4-1/2	G1/2	Standard	1

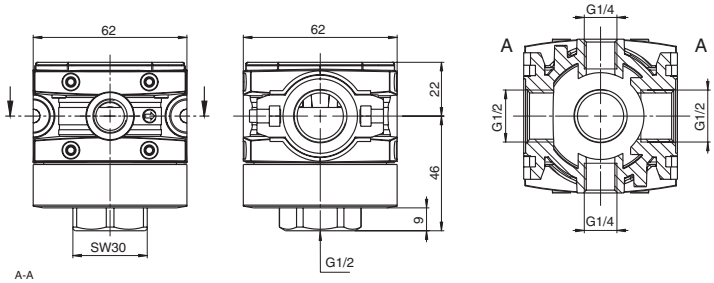

Manifold - size 6 G1

order-no.	type	thread	design	VPE
17960461	WH-VT6-1	G1	Standard	1

Accessories - WH

Technical data

Pressure range : max. 20 bar for metal container
Temperature range : max. + 60°C for metal container

Dimensions: **WH-SK-1** **WH-SK-3**

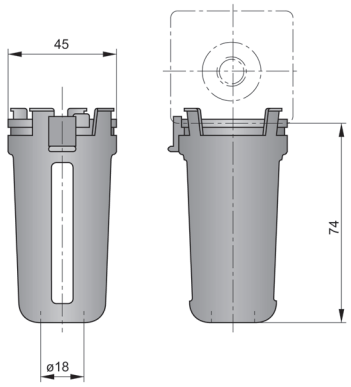

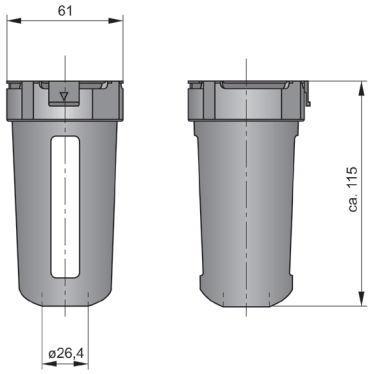

Metal container for combi unit and filter
without sight glass

order-no.	type	metal container for	VPE
17960191	WH-ZUB-MB-K/F-1	Baugröße 1=1/4“-3/8“	1

Metal container for combi unit and filter
with sight glass

order-no.	type	metal container for	VPE
17960180	WH-ZUB-MBS-K/F-1	Baugröße 1=1/4“-3/8“	1

Metal container for lubricator
with sight glass

order-no.	type	metal container for	VPE
17960183	WH-ZUB-MBS-Ö-1	Baugröße 1=1/4“-3/8“	1

Protective cage for combi-devices, filter and lubricator

order-no.	type	Protective cage for	VPE
17960196	WH-ZUB-SK-1	Baugröße 1=1/4“-3/8“	1

Accessoires on request.

Accessories - WH

Technical data	:	Condensate drainage, automatic
Type	:	floater-operated condensate outlet valve
Operating pressure range	:	0 - 16 bar
Temperature range	:	max. 80° C
Mounting position	:	vertical
Fastening mode	:	mounting in the condensate container with retaining ring
Weight	:	0,06 kg
Condensate draining	:	*- fully automatic during operation when a certain level of the condensate is reached* *- semi-automatic with pressure release* *- manually operated (by turning of the screw)*

Function of automatic condensate outlet

With this automatic condensate outlet the drainage is controlled via a floater. This floater opens the outlet bore when a certain condensate level is reached until the collected condensate is drained.

Automatic condensate outlet - size 4 an 6 without container
for combi units and filter of the series size 4 and 6

order-no.	type	Autom. condensate outlet for	VPE
17960219	WH-ZUB-autom.-Kondensatablass-4/6	Baugröße 4 u. 6=1/2“-1“	1

Automatic condensate outlet - size 1 incl. container
for combi devices and filter of the series 1

order-no.	type	design container	VPE
17960175	WH-ZUB-Behälter-A-K/F1	plastic	1
17960184	WH-ZUB-MBA-K/F-1	metal	1
17960192	WH-ZUB-MBSA-K/F-1	metal – sight glass	1

Coupling kits
for the connection of several single devices

consists of: coupling made of zinc Z410, countersunk screw DIN 7991, o-ring of NBR

order-no.	type	für size	design	VPE
17960107	WH-ZUB-KUP0-R/K+F/Ö	0	Regler/Kombigerät + Filter/Öl	1
17960116	WH-ZUB-KUP0-R/K+SMF+AKF	0	Regler/Kombigerät + Submikrof	1
17960118	WH-ZUB-KUP0-SMF+AKF	0	Submikrofilter + Aktivkohlefil	1
17960401	WH-ZUB-KUP1	1	Wartungsgeräte Serie 1 komplet	1
17960836	WH-ZUB-KUP4	4	Wartungsgeräte Serie 4 komplet	1
17960460	WH-ZUB-KUP6	6	Wartungsgeräte Serie 6 komplet	1

Accessoires on request.

Accessories - WH

Cylinder key lock
only for lockable devices with adaptor for lock (RS)

order-no.	type	Zylinderschloss für	VPE
17960145	WH-ZUB-Schloss-1/3/4/6	Baugröße 1/3/4/6 = G1/8 - G1	1

WH-ZUB-BW-0

WH-ZUB-BW-1

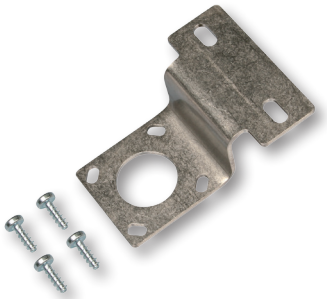

WH-ZUB-BW-4

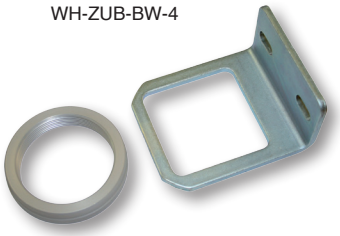

WH-ZUB-BW-6

WH-ZUB-BW-6 für-F6-Ö6-SMF6/AKF6

Fastening bracket - dimensions: see the respective device

order-no.	type	Befestigungswinkel für		VPE
17960117	WH-ZUB-BW-0	Baugröße 0=1/8“-1/4“	(controller and combination unit only)	1
17960143	WH-ZUB-BW-1	Baugröße 1=1/4“-3/8“		1
17960837	WH-ZUB-BW-4	Baugröße 4=1/2“		1
17960459	WH-ZUB-BW-6	Baugröße 6 = G1	(controller and combination unit only)	1
17960469	WH-ZUB-BW-6 für-F6-Ö6-SMF6/AKF6	Baugröße 6 = G1	(nur Filterwasserabscheider, Öler, Submikro- und Activated carbon filter)	1

Accessoires on request.

price query on:
pneumatikshop.de

SERIES W85

Maintenance units

Combi appliance
Maintenance unit, 2-pieces
Filter water separator
Pressure controller
Mist lubricator
Shut-off valve
Accessories

Designs

type series 0:	for small flow rates in G1/8 and G1/4
type series 1:	for small flow rates in G1/4 and G3/8
type series 4:	for medium flow rates in G1/2
type series 6:	for high flow rates in G1

Technical data

medium	: compressed air
max. operating press.	: 15 bar
operating temp.	: -10 °C up to +50 °C at 10 bar
mounting position	: vertical
filter unit	: 20 µm
manometer	: included with pressure regulators, combination devices and maintenance units.
condensate exhaust	: semi-automatic / automatic (BG 4, 6)
flow rate at 6 bar	: see allocation for the individual articles
application	: typical pneumatic appications

	BG 0	BG 1	BG 4	BG 6
connection	1/8", 1/4"	1/4", 3/8"	1/2"	1"
max. condensate quantity	17,5 cm³	22 cm³	46 cm³	89,5 cm³
max. operating pressure	0 - 15 bar	0 -15 bar	0 - 15 bar	0 - 15 bar
control range	0 - 8 bar	0 - 8 bar	0 - 8 bar	0 - 8 bar

Further control ranges on request

Materials

housing	: plastic
o-rings	: NBR
knob	: plastic
adjusting screw	: brass
container	: plastic
spring	: stainless steel

Maintenance units

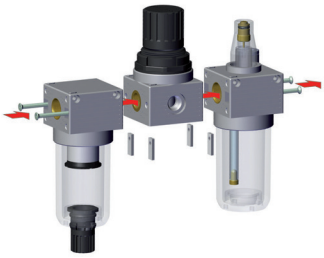

Assembly (type series 0)

Generally the assembling of the maintenance units components has to follow this order:
filter, regulator, lubricator.
While connecting the components, be sure that the air flows towards the direction of the arrows located on the upper surface of the components.

The setting up of the parts has to be done as follows:

- Put the plates in the proper places of the bodies.
- Put the assembling parts together, making sure that the o-ring are in their proper seats.
- Tighten the screws on the plates.

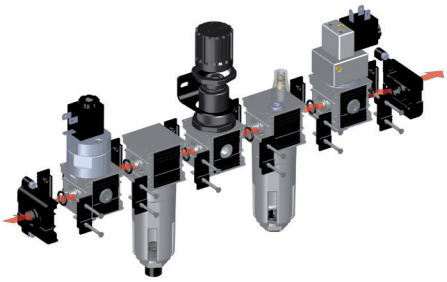

Assembly (type series 1, 4, 6)

Generally the assembling of the maintenance units components has to follow this order:
shut-off valve, filter, regulator, lubricator and start valve.
While connecting the components, be sure that the air flows towards the direction of the arrows located on the upper surface of the components.

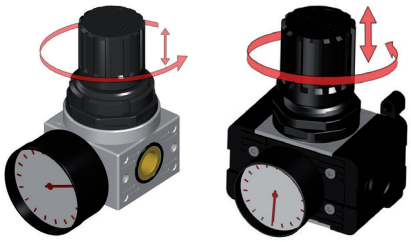

Pressure regulation

To regulate the pressure follow these suggestions:

- raise the knob to the regulating position;
- fix up the required pressure always upgrade
- then press the knob to the block position.

The manometer has to be assembled manually with the addition of liquid sealant.
The quick exhaust regulator allows the circuit downstream to exhaust rapidly when upstream pressure is interrupted.

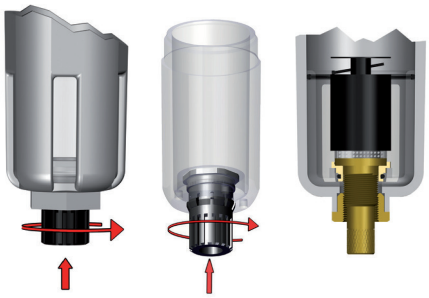

Function condensate exhaust

The automatic/semiautomatic condensate exhaust is normally in the open position; i.e. it exhaust automatically the condensate when there is no pressure inside of the bowl. Pressing the knob it is possible to exhaust the condensate even if it is on pressure, turning the knob in anticlockwise sense the exhaust is in the close position.
The condensate exhaust is available for the type series 4 and 6. It works as a float that exhausts the condensate when this reaches the programmed level without any relation to the pressure used.

Disassembling of the bowl (type series 0)

To disassemble the bowl use a caliper face spanners. The transparent bowl permits the control of the condensate level in the filter and the oil level in the lubricator.

Disassembly of the bowl (type series 1, 4, 6)

To disassembly the bowl use an hexagon tube wrench. The bowl has got trasparent windows which permit to check the lubricator oil level or the filter condensate level.

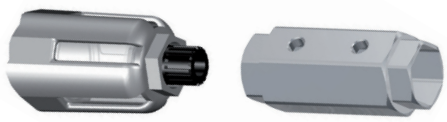

Oil refill

To insert the oil into the lubricator unscrew the plug located on the upper surface or disassemble the bowl making sure that there is no pressure in the system. To regulate the oil into the circuit act with a screwdriver on the needle and adjust 1 oil drop every 300/600 Nl/min.

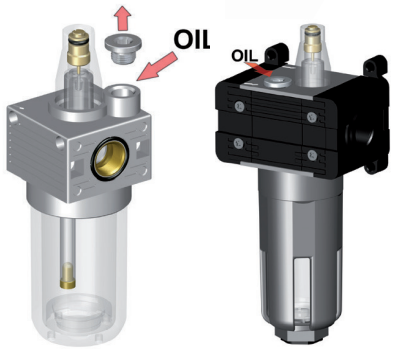

Function shut off valve

The driving of the shut off valve follows these steps:

- Pressing the start push button 1 you open the primary circuit towards the use;
- Pressing the push button 2 you close the primary circuit and put the secondary one in exhaust. A padlock can lock this last operation.

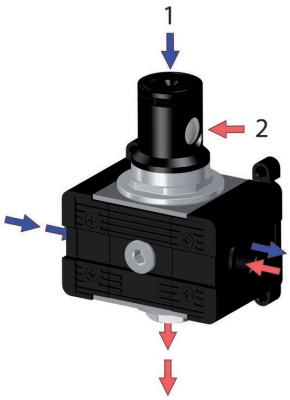

Adjustment soft start valve

The soft start valve is a pneumatic valve that permits to pressurize gradually and constantly the pneumatic systems. The quick exaust is present on our soft starter; by switching off the electrical signal it stops the air-intake, exhusting the remaining air downstream. To regulate the pressure increasing time use a screw.
An electrical impulse gives power to the starter. Install the starter on the system just after the components for air treatment.

Adjustment screw for starting speed control:
- screwed = slow pressure build-up
- unscrewed = fast pressure build-up

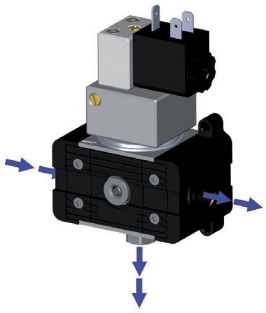

Mounting

The part used to fix the maintenance unit on the wall can be used as a distance spacer as well.
It is enough to unscrew this part, turn it and screw it again. The distance spacer permits in this way the fixing of the treatment of compressed air on surfaces not properly smooth and flat.

combi unit
consisting of filter controller- manometer

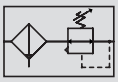

G1/8 - G3/8

combi unit - type series 0
incl. switch panel nut, filter 20 µm and manometer

G1/8
G1/4

order-no.	type	thread	control range bar	flow rate Nl/min	condensate exhaust	condensate quantity max.	VPE
17860100	WAI-K0-1/8-12-M	G1/8	0 - 8	600	semiautom.	17,5 cm³	1
17860101	WAI-K0-1/4-12-M	G1/4	0 - 8	600	semiautom.	17,5 cm³	1

Further control ranges on request!

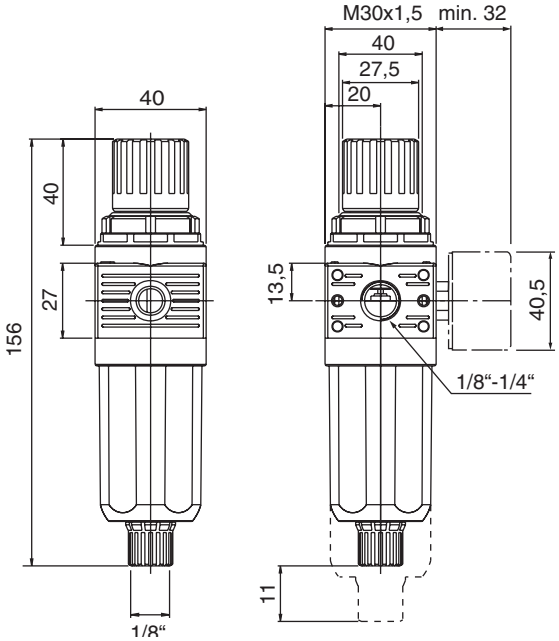

combi unit - type series 1
incl. switch panel nut, filter 20 µm and manometer

G1/4
G3/8

order-no.	type	thread	control range bar	flow rate Nl/min	condensate exhaust	condensate quantity max.	VPE
17860102	WAI-K1-1/4-12-M	G1/4	0 - 8	1650	semiautom.	22 cm³	1
17860103	WAI-K1-3/8-12-M	G3/8	0 - 8	1650	semiautom.	22 cm³	1

Further control ranges on request!

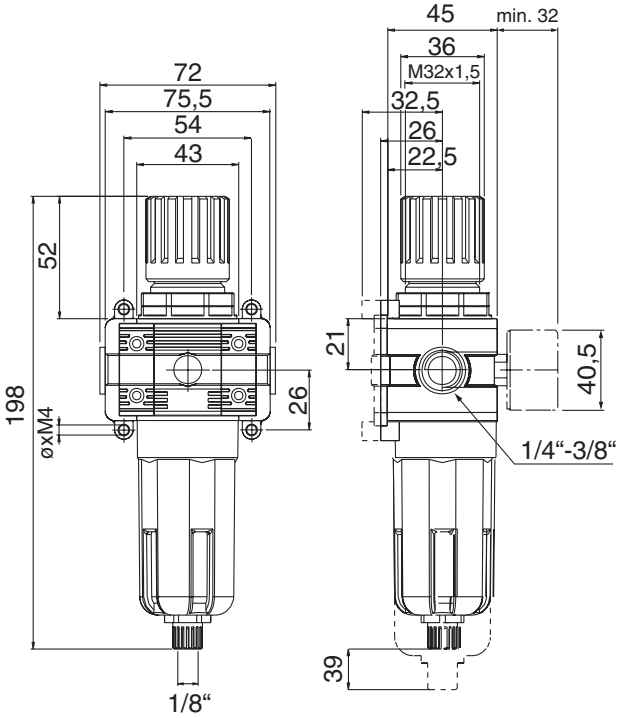

W85

combi unit - type series 4

incl. switch panel nut, filter 20 µm and manometer

G1/2

order-no.	type	thread	control range bar	flow rate Nl/min	condensate exhaust	condensate quantity max.	VPE
17860104	WAI-K4-1/2-12-M	G1/2	0 - 8	3000	semiautom.	46 cm³	1
17860110	WAI-K4-1/2-12-A-M	G1/2	0 - 8	3000	autom.	46 cm³	1

Further control ranges on request!

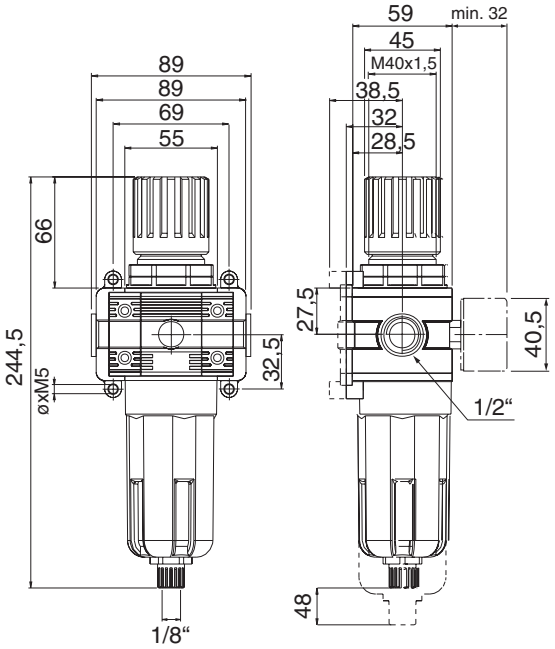

combi unit - type series 6

incl. switch panel nut, filter 20 µm and manometer

G1

order-no.	type	thread	control range bar	flow rate Nl/min	condensate exhaust	condensate quantity max.	VPE
17860105	WAI-K6-1-12-M	G1	0 - 8	4500	semiautom.	89,5 cm³	1
17860111	WAI-K6-1-12-A-M	G1	0 - 8	4500	autom.	89,5 cm³	1

Further control ranges on request!

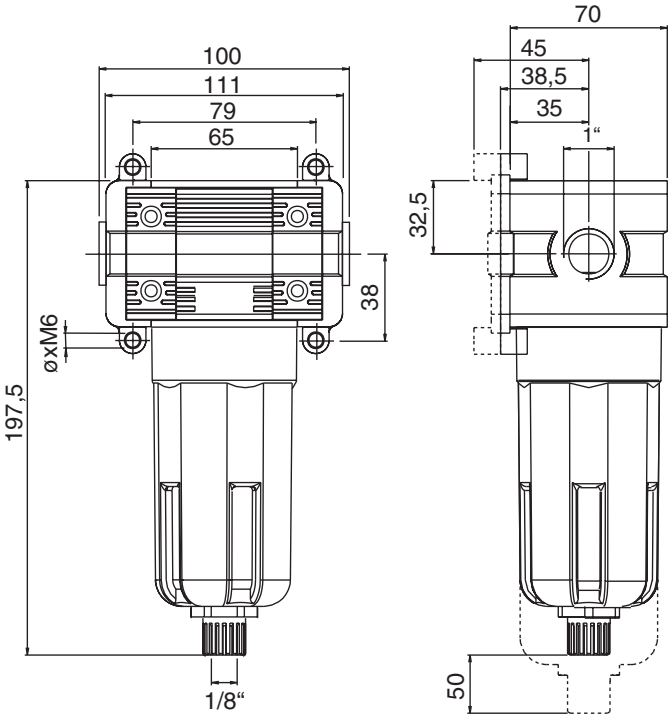

maintenance unit - 2 pieces

consisting of: combi unit - mist lubricator - manometer

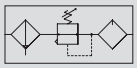

G1/8 - G3/8

maintenance unit - type series 0

incl. switch panel nut and manometer

G1/8
G1/4

order-no.	type	thread	control range bar	flow rate Nl/min	condensate exhaust	condensate quantity max.	VPE
17860115	WAI-KÖ0-1/8-12-M	G1/8	0 - 8	260	semiautom.	17,5 cm³	1
17860116	WAI-KÖ0-1/4-12-M	G1/4	0 - 8	260	semiautom.	17,5 cm³	1

Further control ranges on request!

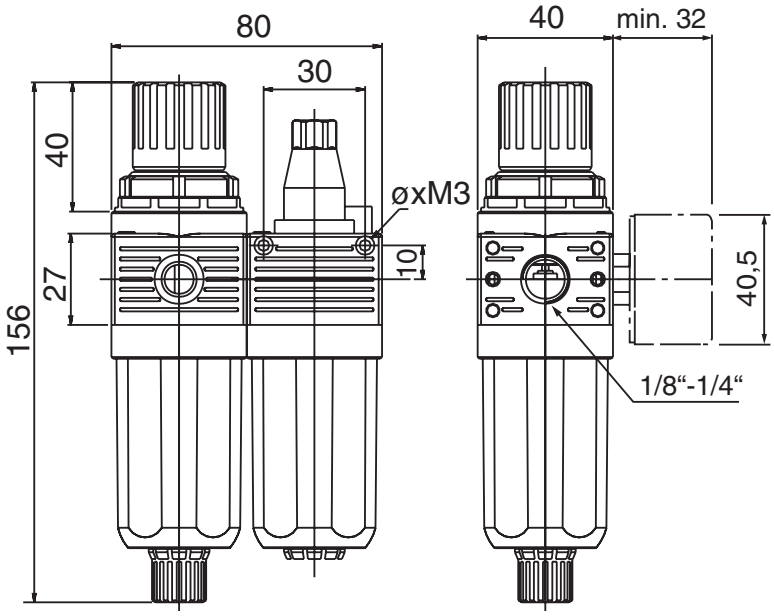

maintenance unit - type series 1

incl. switch panel nut and manometer

G1/4
G3/8

order-no.	type	thread	control range bar	flow rate Nl/min	condensate exhaust	condensate quantity max.	VPE
17860117	WAI-KÖ1-1/4-12-M	G1/4	0 - 8	1100	semiautom.	22 cm³	1
17860118	WAI-KÖ1-3/8-12-M	G3/8	0 - 8	1100	semiautom.	22 cm³	1

Further control ranges on request!

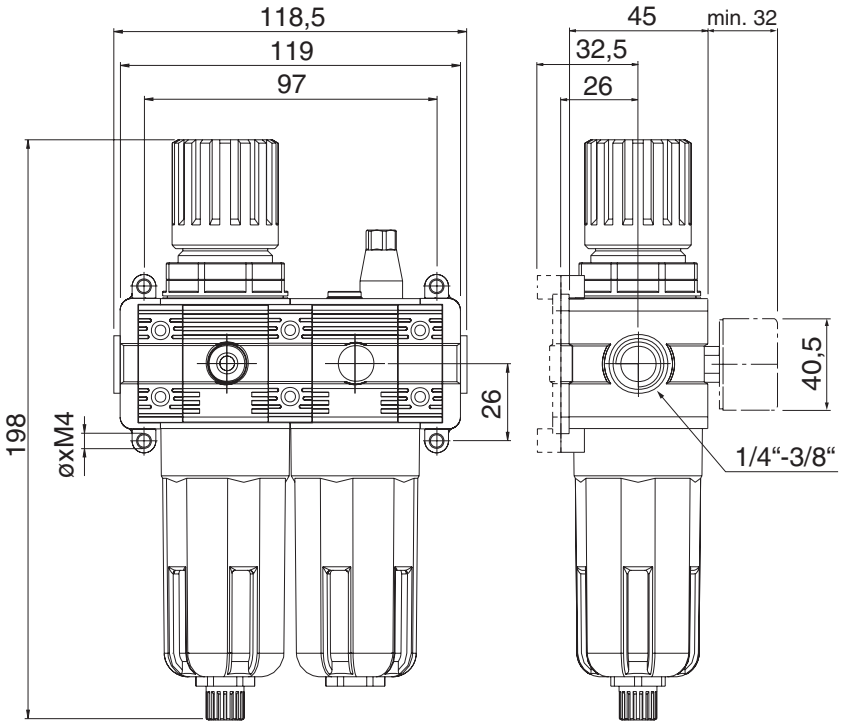

maintenance unit - 2 pieces

consisting of: combi unit - mist lubricator - manometer

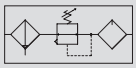

G1/2 - G1

maintenance unit - type series 4

incl. switch panel nut and manometer

G1/2

order-no.	type	thread	control range bar	flow rate Nl/min	condensate exhaust	condensate quantity max.	VPE
17860119	WAI-KÖ4-1/2-12-M	G1/2	0 - 8	2500	semiautom.	46 cm³	1
17860125	WAI-KÖ4-1/2-12-A-M	G1/2	0 - 8	2500	autom.	46 cm³	1

Further control ranges on request!

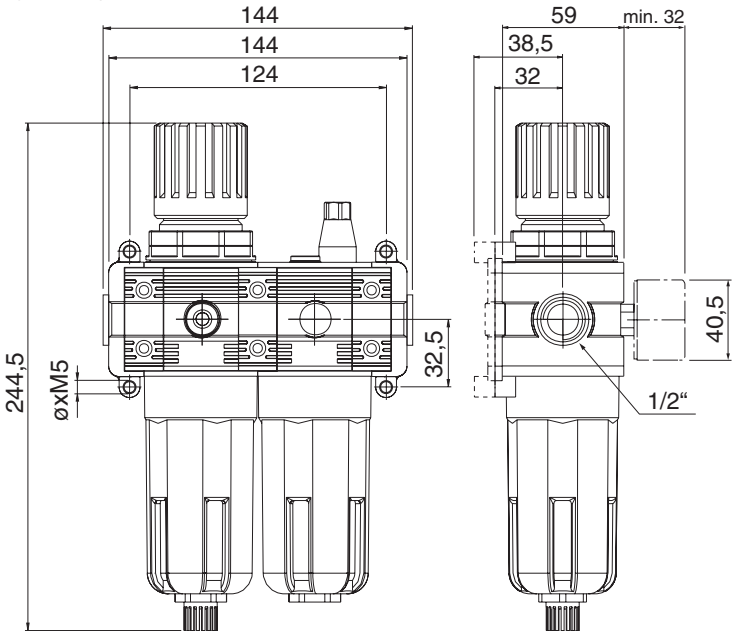

maintenance unit - type series 6

incl. switch panel nut and manometer

G1

order-no.	type	thread	control range bar	flow rate Nl/min	condensate exhaust	condensate quantity max.	VPE
17860120	WAI-KÖ6-1-12-M	G1	0 - 8	4300	semiautom.	89,5 cm³	1
17860126	WAI-KÖ6-1-12-A-M	G1	0 - 8	4300	autom.	89,5 cm³	1

Further control ranges on request!

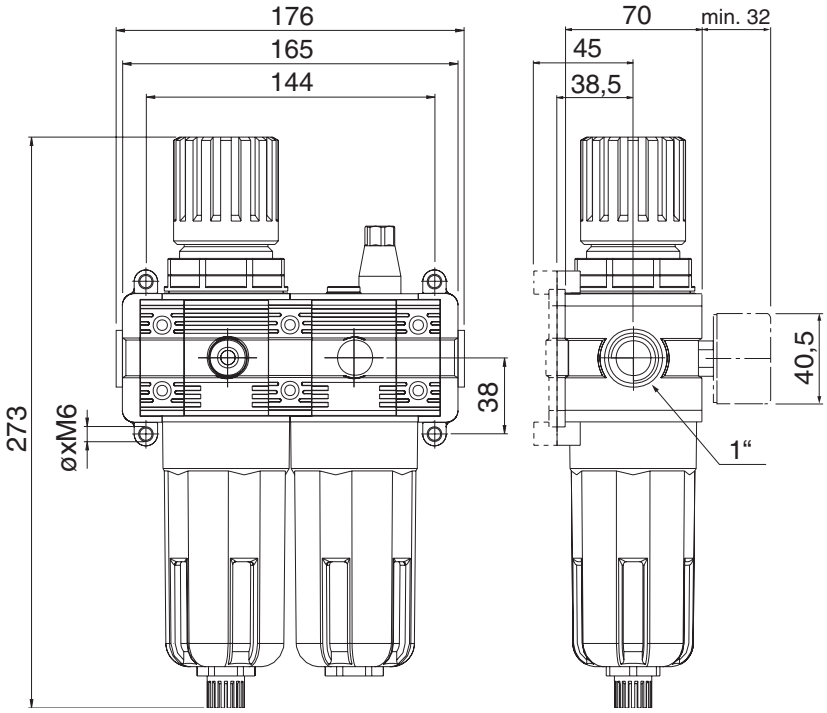

W85

filter water separator

G1/8 - G3/8

filter water separator - type series 0

G1/8
G1/4

order-no.	type	thread	filter fineness µm	flow rate Nl/min	condensate exhaust	condensate quantity max.	VPE
17860130	WAI-F0-1/8	G1/8	20	800	semiautom.	17,5 cm³	1
17860131	WAI-F0-1/4	G1/4	20	800	semiautom.	17,5 cm³	1

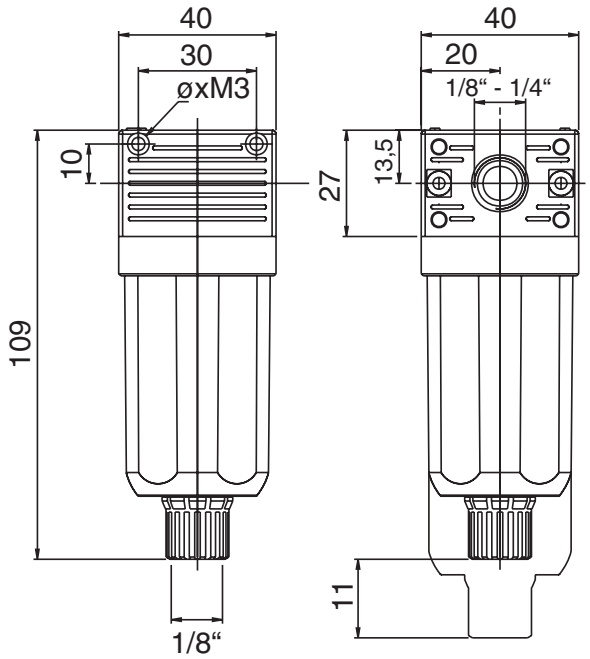

filter water separator - type series 1

G1/4
G3/8

order-no.	type	thread	filter fineness µm	flow rate Nl/min	condensate exhaust	condensate quantity max.	VPE
17860132	WAI-F1-1/4	G1/4	20	1900	semiautom.	22 cm³	1
17860133	WAI-F1-3/8	G3/8	20	1900	semiautom.	22 cm³	1

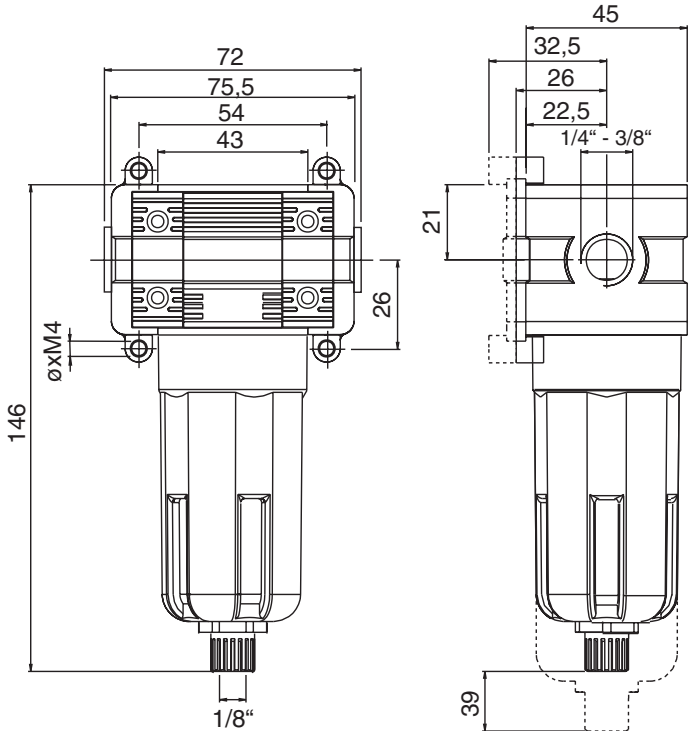

filter water separator - type series 4

G1/2

order-no.	type	thread	filter fineness µm	flow rate Nl/min	condensate exhaust	condensate quantity max.	VPE
17860134	WAI-F4-1/2	G1/2	20	3750	semiautom.	46 cm³	1
17860140	WAI-F4-1/2-A	G1/2	20	3750	autom.	46 cm³	1

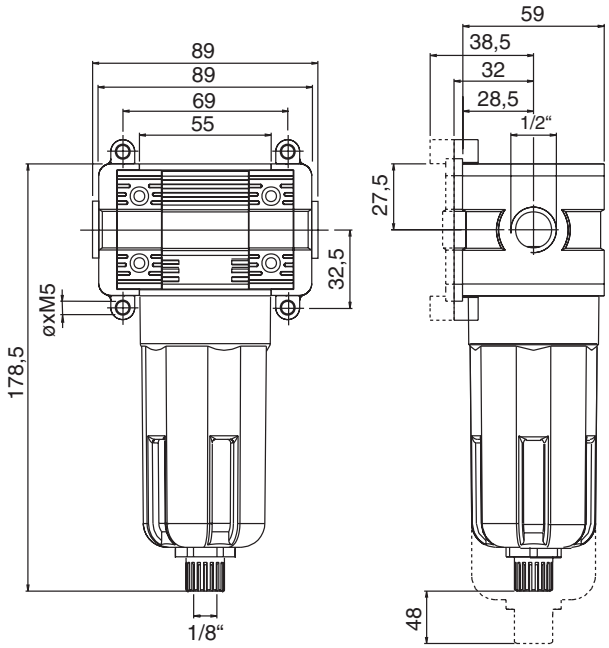

filter water separator - type series 6

G1

order-no.	type	thread	filter fineness µm	flow rate Nl/min	condensate exhaust	condensate quantity max.	VPE
17860135	WAI-F6-1	G1	20	6250	semiautom.	89,5 cm³	1
17860141	WAI-F6-1-A	G1	20	6250	autom.	89,5 cm³	1

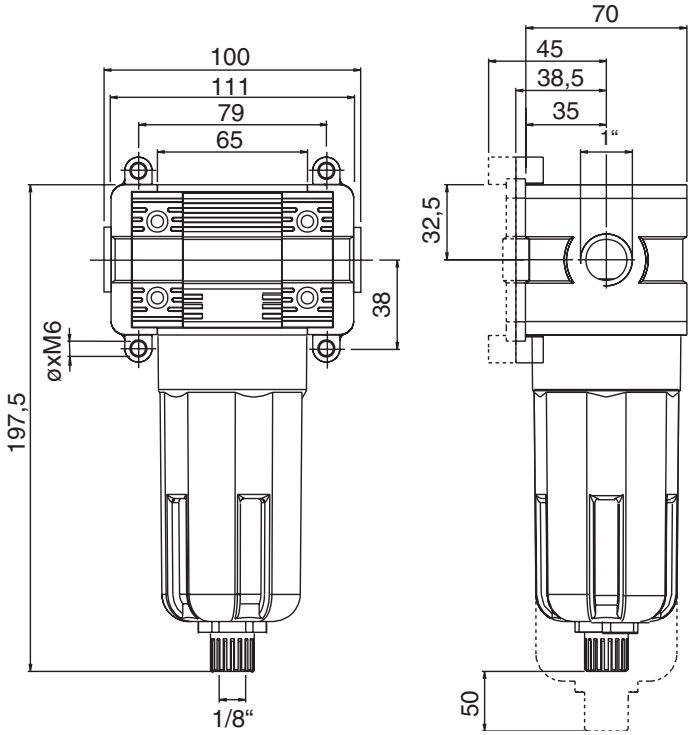

pressure controller
consisting of: pressure controller - manometer

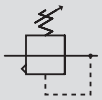

G1/8 - G3/8

pressure controller - type series 0
incl. manometer

G1/8
G1/4

order-no.	type	thread	control range bar	flow rate Nl/min	VPE
17860145	WAI-R0-1/8-12-M	G1/8	0 - 8	600	1
17860146	WAI-R0-1/4-12-M	G1/4	0 - 8	600	1

Further control ranges on request!

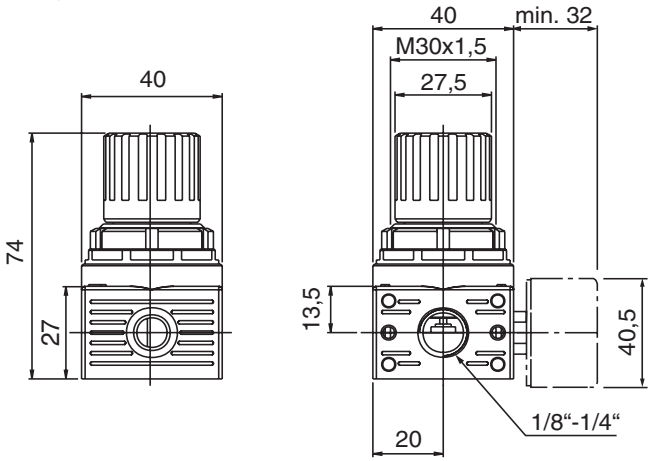

pressure controller - type series 1
incl. manometer

G1/4
G3/8

order-no.	type	thread	control range bar	flow rate Nl/min	VPE
17860147	WAI-R1-1/4-12-M	G1/4	0 - 8	2050	1
17860148	WAI-R1-3/8-12-M	G3/8	0 - 8	2050	1

Further control ranges on request!

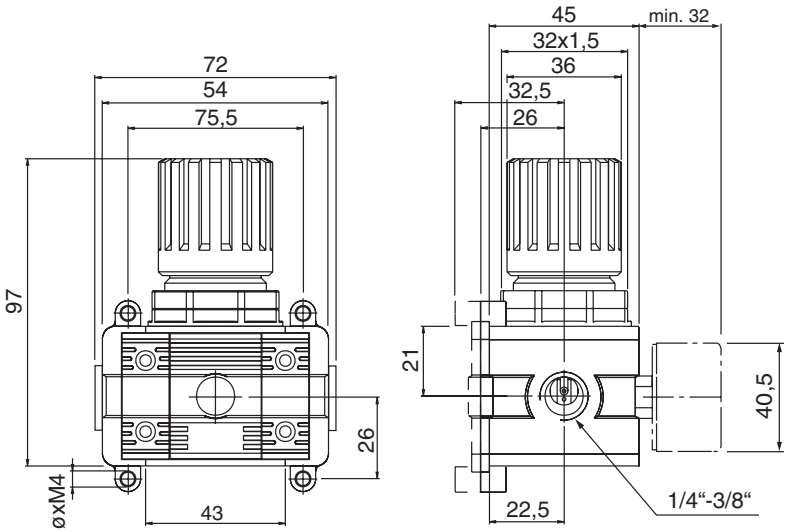

pressure controller - type series 4
incl. manometer

G1/2

order-no.	type	thread	control range bar	flow rate Nl/min	VPE
17860149	WAI-R4-1/2-12-M	G1/2	0 - 8	3200	1

Further control ranges on request!

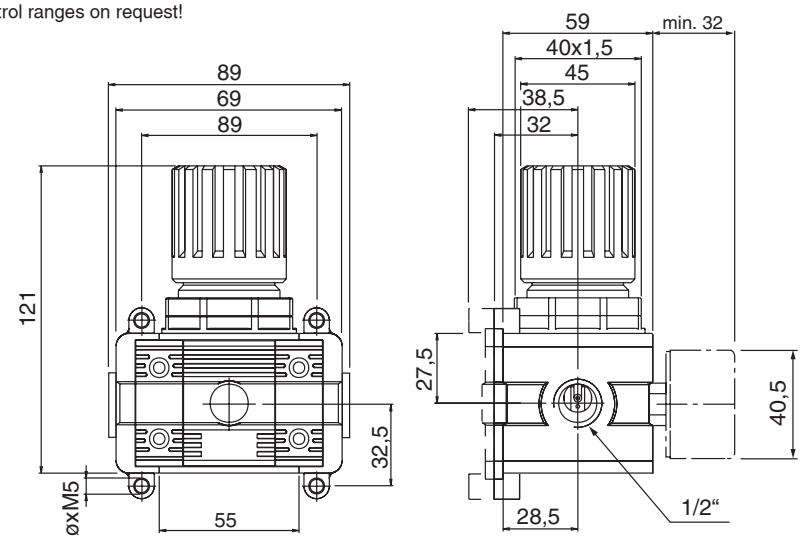

pressure controller - type series 6
incl. manometer

G1

order-no.	type	thread	control range bar	flow rate Nl/min	VPE
17860150	WAI-R6-1-12-M	G1	0 - 8	6200	1

Further control ranges on request!

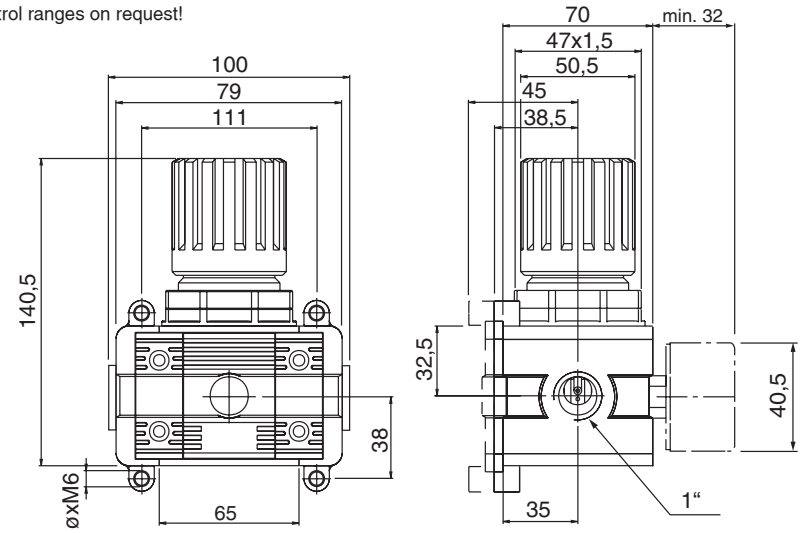

mist lubricator

G1/8 - G3/8

mist lubricator - type series 0

G1/8
G1/4

order-no.	type	thread	flow rate Nl/min	VPE
17860155	WAI-Ö0-1/8	G1/8	700	1
17860156	WAI-Ö0-1/4	G1/4	700	1

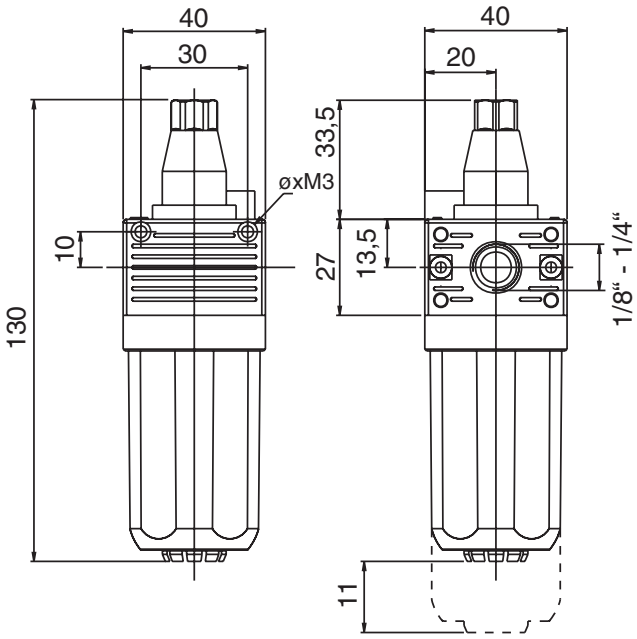

mist lubricator - type series 1

G1/4
G3/8

order-no.	type	thread	flow rate Nl/min	oil filling	VPE
17860157	WAI-Ö1-1/4	G1/4	2600	manually	1
17860158	WAI-Ö1-3/8	G3/8	2600	manually	1

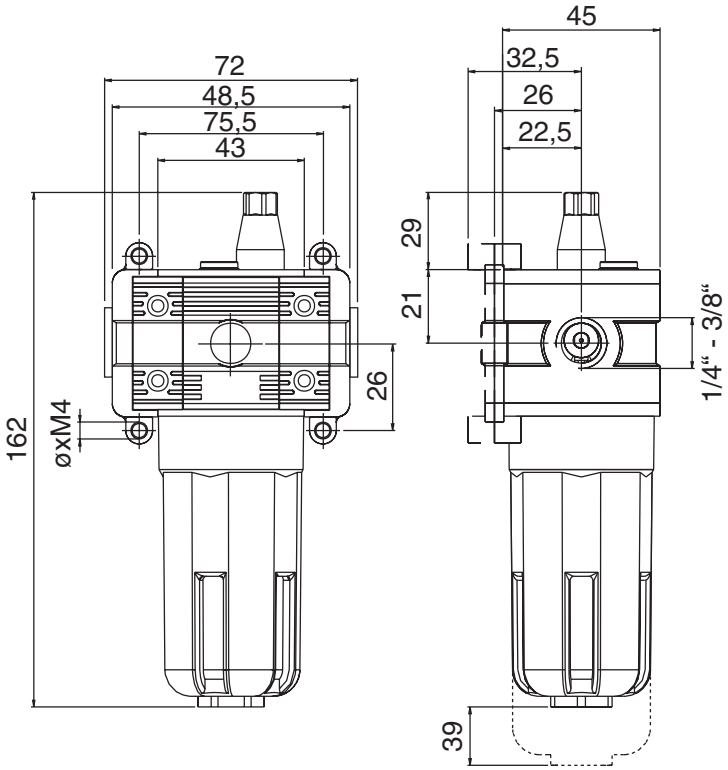

W85

mist lubricator - type series 4

G1/2

order-no.	type	thread	flow rate Nl/min	oil filling	VPE
17860159	WAI-Ö4-1/2	G1/2	5600	manually	1

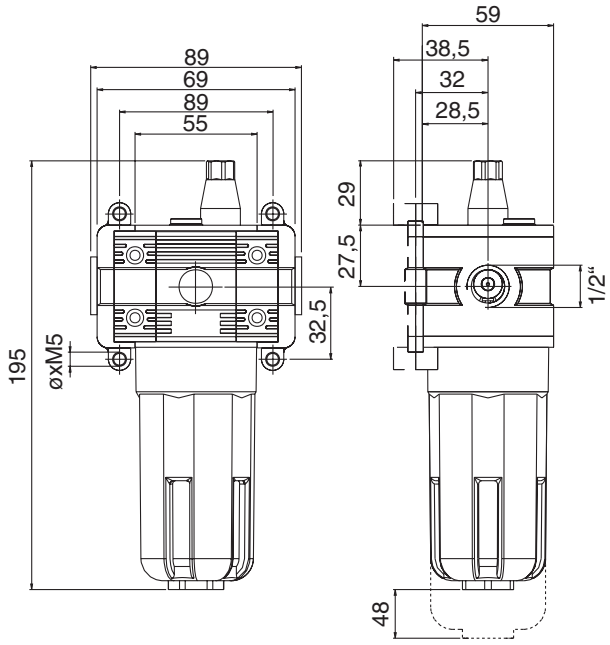

mist lubricator - type series 6

G1

order-no.	type	thread	flow rate Nl/min	oil filling	VPE
17860160	WAI-Ö6-1	G1	8200	manually	1

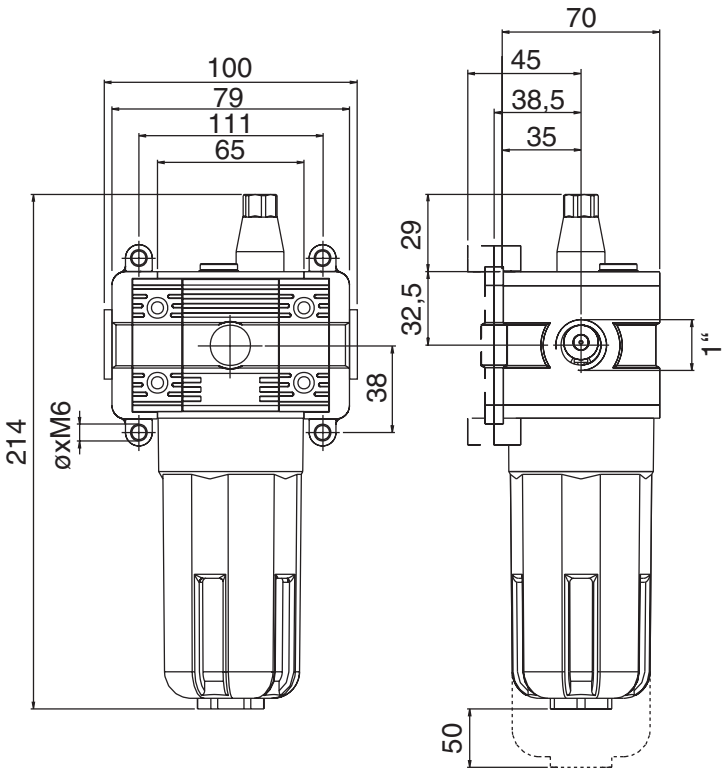

shut-off valve (ball valve) - 3/2-ways

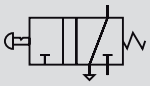

G1/4 - G1

3/2 ways-shut-off valve - type series 1

incl. padlock

G1/4
G3/8

order-no.	type	thread	flow rate Nl/min	control	VPE
17860165	WAI-KH1-1/4	G1/4	1850	manually	1
17860166	WAI-KH1-3/8	G3/8	1850	manually	1

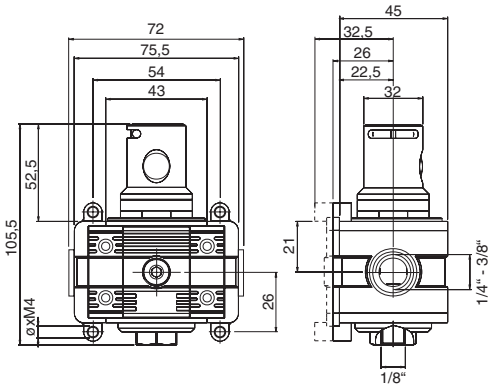

3/2 ways-shut-off valve - type series 4

incl. padlock

G1/2

order-no.	type	thread	flow rate Nl/min	control	VPE
17860167	WAI-KH4-1/2	G1/2	3000	manually	1

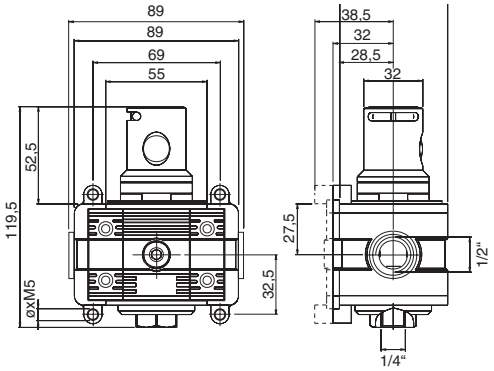

3/2 ways-shut-off valve - type series 6

incl. padlock

G1

order-no.	type	thread	flow rate Nl/min	control	VPE
17860168	WAI-KH6-1	G1	5200	manually	1

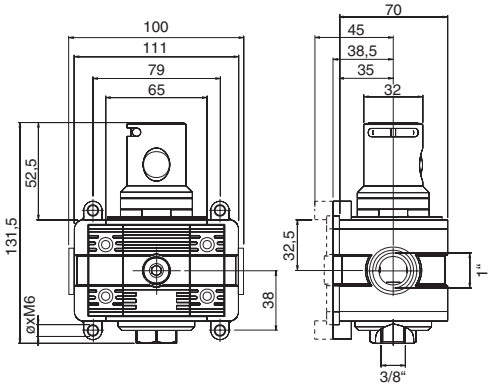

W85

3/2 ways-solenoid valve - type series 1

without coil G3/8

order-no.	type	thread	flow rate Nl/min	control	VPE
17860230	WAI-MV1-3/8	G3/8	1850	electro-pneumatic	1

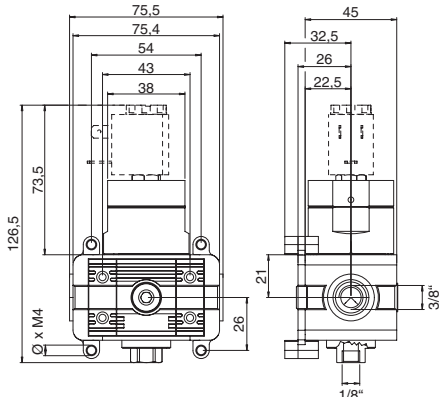

3/2 ways-solenoid valve - type series 4

without coil G1/2

order-no.	type	thread	flow rate Nl/min	control	VPE
17860231	WAI-MV4-1/2	G1/2	3000	electro-pneumatic	1

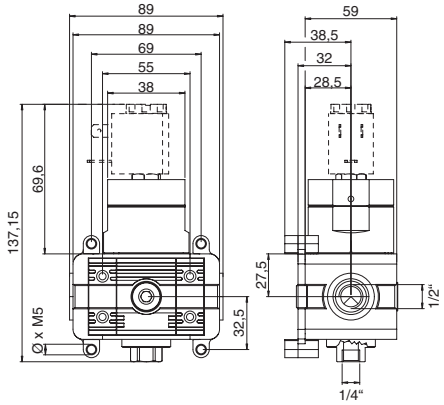

3/2 ways-solenoid valve - type series 6

without coil G1

order-no.	type	thread	flow rate Nl/min	control	VPE
17860232	WAI-MV6-1	1	5200	electro-pneumatic	1

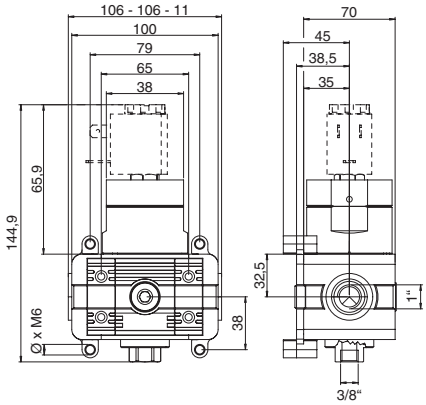

Start-up/stop valve combination

G3/8 - G1

Start-up/stop valve combination - type series 1

without coil

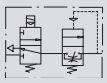

G3/8

order-no.	type	for type series	thread.	max. operating pressure	VPE
17860215	WAI-ANPV-1-3/8	1	G3/8	4 - 10 bar	1

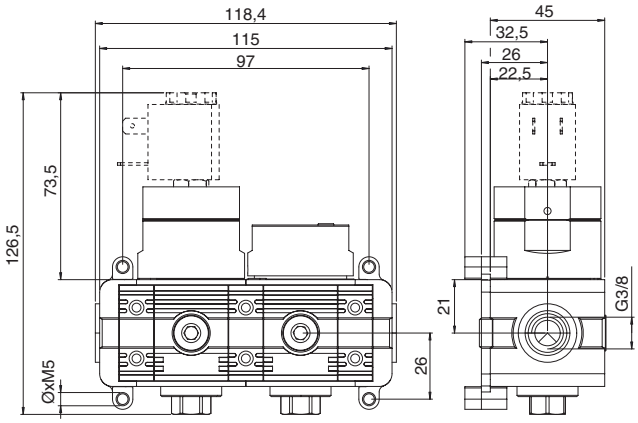

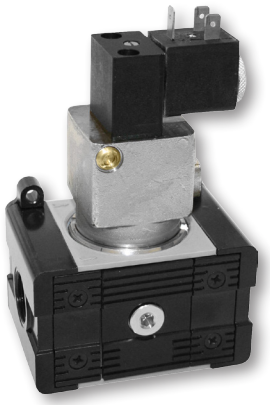

Start-up/stop valve combination - type series 4

without coil

G3/8
G1/2

order-no.	type	for type series	thread.	max. operating pressure	VPE
17860216	WAI-ANPV-4-3/8	4	G3/8	4-10 bar	1
17860217	WAI-ANPV-4-1/2	4	G1/2	4-10 bar	1

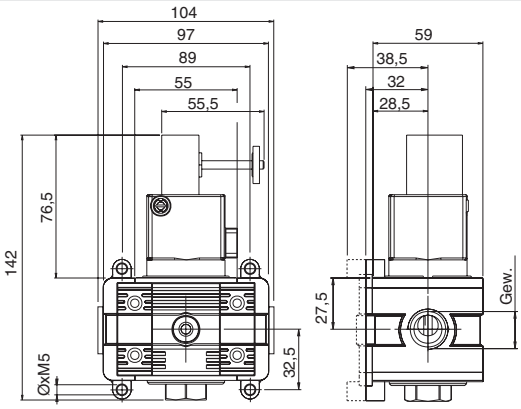

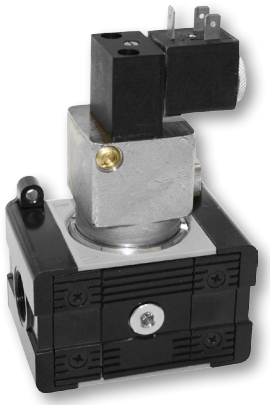

Start-up/stop valve combination - type series 6

without coil

G1

order-no.	type	for type series	thread.	max. operating pressure	VPE
17860218	WAI-ANPV-6-1	6	G1	3 - 10 bar	1

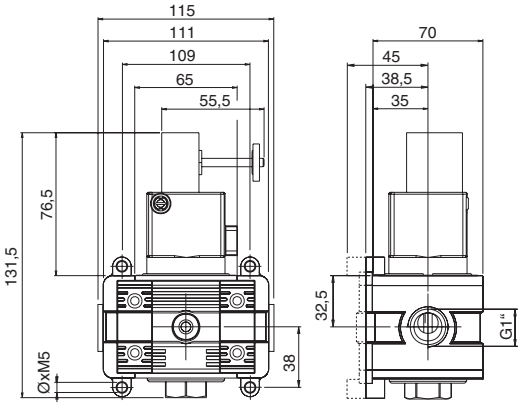

W85

Solenoid
for WAI-devices

TYP C1

order-no.	type	solenoid type	voltage	current consumption ≈AC (VA) initial	hold	=DC (W)	VPE
17860173	WAI-Spule-24V=	C1	24V=			3	1
17860174	WAI-Spule-220V	C1	220V		5		1

Suitable connectors according to DIN43650 on page 258.

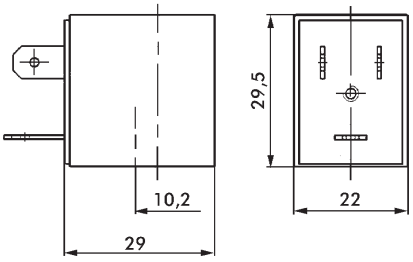

Mounting bracket

order-no.	type	for type series	A	B	C	D	E	VPE
17860175	WAI-ZUB-BW-0	0*	21,5	5,5	12	15	31	1
17860176	WAI-ZUB-BW-1	1	28	5,5	10	15	29	1
17860177	WAI-ZUB-BW-4	4	40	5,5	10	18	35	1
17860178	WAI-ZUB-BW-6	6	50	5,5	10	20	39	1

*only for controllers, combi units and maintenance units

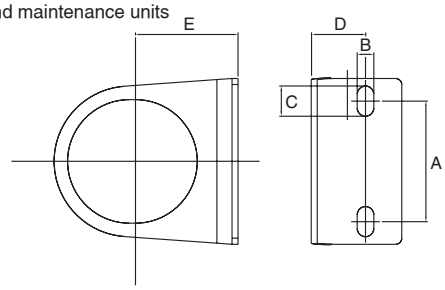

Coupling set for connecting several individual devices

order-no.	type	for type series	VPE
17860185	WAI-ZUB-KUP0	0	1
17860186	WAI-ZUB-KUP1	1	1
17860187	WAI-ZUB-KUP4	4	1
17860188	WAI-ZUB-KUP6	6	1

Manifolds

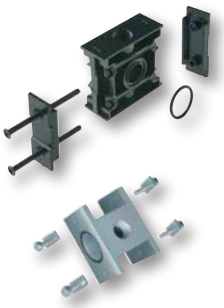

order-no.	type	for type series	VPE
17860210	WAI-VT0-1/8	0	1
17860211	WAI-VT1-1/4	1	1
17860212	WAI-VT4-1/4	4	1
17860213	WAI-VT6-3/8	6	1

Accessories

Container with sight glass
for combi unit and filter

plastic

order-no.	type	for type series	VPE
17860195	WAI-ZUB-Behälter-Filter-0	0	1
17860196	WAI-ZUB-Behälter-Filter-1	1	1
17860197	WAI-ZUB-Behälter-Filter-4	4	1
17860198	WAI-ZUB-Behälter-Filter-6	6	1

Container for automatic condensate exhaust
für combi unit and filter

plastic

order-no.	type	for type series	VPE
17860200	WAI-ZUB-Behälter autom.-4	4	1
17860201	WAI-ZUB-Behälter autom.-6	6	1

Container with sight glass
for lubricator

plastic

order-no.	type	for type series	VPE
17860205	WAI-ZUB-Behälter für Öler-0	0	1
17860206	WAI-ZUB-Behälter für Öler-1	1	1
17860207	WAI-ZUB-Behälter für Öler-4	4	1
17860208	WAI-ZUB-Behälter für Öler-6	6	1