SERIES V10

Solenoid valves

MAXI-Solenoid valve
MINI-Solenoid valve
Spare solenoid coil
Device plug

price query on:
pneumatikshop.de

Function

Solenoid valves

are control devices which release, block or by-pass a flowing medium.

The actuating element is a solenoid. Our solenoid valves are suitable

for water, air, gas and other media corresponding to the materials.

Application

- purification of waste gases
- analysis technology
- mining
- sprinkling technology
- concrete mixing constructions
- gas cutting installations
- dosing technology
- compressed air generation
- iron and steel industry
- bottle purification equipment
- conveyor technology
- plant nursery technology
- greenhouse technology
- hot water control
- steam control
- heating systems
- air conditioning technology
- power plants
- plastic die casting machines
- extinguishing installation
- medical technology
- milking plant
- fruit presses
- petrochemistry
- flue gas desulfurization
- sanitary constructions
- shipbuilding
- industrial washing plants
- water treatment

Technical Date

The specifications and the field of application are assigned to the respective article in the catalog.

Valve bodies made of stainless steel and other sealings (EPDM, FKM and PTFE - compoand) are also available on request.

With the servo-controlled valves the installation length is conform to ISO.

Unless otherwise stated, the valves are manufactured in accordance with Art. 4 Para. 3 of the Pressure Equipment Directive PED 2014/68/EU.
The stated operating parameters of the valves refer only to non-overheated liquids of group 2 according to PED.

Assembly

- These pneumatic components are mounted according to the connection diagram or the operating mode.
- Please pay attention to the letters, numbers or direction signs which are placed on the respective valve bodies.

MAXI-Solenoid valve - servo-controlled G3/8 - G2

2/2-way-diaphragm solenoid valve

Application: The solenoid valves are used where flowing media have to be released, blocked or by-passed. The actuating element is a solenoid.

Function: The pressure connection has to be attached according to the direction sign as shown in the sectional drawing so that the pressure is applied below the diaphragm. Through a small opening in the diaphragm the present pressure flows slowly into the upper part which is additionally forced down to the housing seat by a spring.

As soon as the voltage is applied at the solenoid the small valve seat below the solenoid valve opens and releases a bore which exhausts the upper diaphragm cavity.

So that this can occur it is essential that a pressure difference of minimum 0,3 to 0,5 bar between inlet pressure and outlet pressure is kept, otherwise the pressure below the diaphragm can not be exhausted and therefore the diaphragm does not open the valve.

Technical data

Connection	:	Withworth pipe thread - G3/8 up to G2
Design	:	poppet valve with diaphragm sealing
Pressure range	:	see table, **not suitable for vacuum**
Temperature range	:	NBR: -10°C up to +80°C, FKM and EPDM: -10°C up to +130°C
Mounting position	:	optional
Viscosity	:	max. 2,5 degrees E

Housing	armature guide tube	sealings	medium
brass blank	stainless steel with NC brass with NO	NBR 70 (-10°C up to +80°C) EPDM (-10°C up to +130°C) FKM (-10°C up to +130°C)	air, water, inert gas, oil, fuel oil hot water hot air

Electrical data

Coil temp. class	:	F (+155°C)
Duty cycle	:	100 % ED
Protection class	:	IP 65 (with plug DIN 43650)

		AC current	DC current
Standard voltages	:	24V, 110V, 230V 50Hz	12V, 24V
Coil C1	:	8 VA (holding) / 12 VA (pick-up)	5,5 W
Coil C2	:	12 VA (holding) / 16 VA (pick-up)	8,0 W
Coil C3	:	13 VA (holding) / 20 VA (pick-up)	8,0 W
Coil C4	:	22 VA (holding) / 40 VA (pick-up)	27,0 W
voltages tolerances	:	-15% up to +10%	-5% up to +10%

Dimensions NC

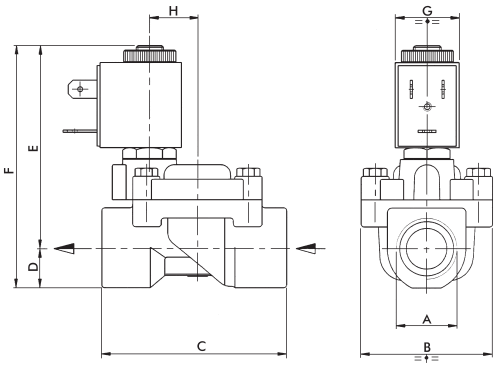

A	B	C	D	E	F	G C1	G C3	H
G3/8	45	64	14	69	83	22		17
G1/2	45	64	14	69	83	22		17
G3/4	54	82	17	80	97	22		22
G1	72,5	100	20	90	110		30	30,5
G1¼	97,5	134	28	110	138		30	41,5
G1½	97,5	134	28	110	138		30	41,5
G2	119	152	36	117	153		30	48

Dimensions NO

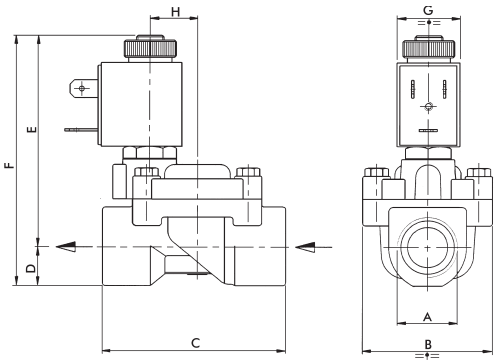

A	B	C	D	E	F	G C1	G C3	H
G3/8	45	64	14	73	87	22		17
G1/2	45	64	14	73	87	22		17
G3/4	54	82	17	84	101	22		22
G1	72,5	100	20	94	114		30	30,5
G1¼	97,5	134	28	114	142		30	41,5
G1½	97,5	134	28	114	142		30	41,5
G2	119	152	36	131	157		30	48

MAXI-Solenoid valve - servo-controlled G3/8 - G2

2/2-way-diaphragm solenoid valve

Consisting of: 1 valve, 1 solenoid coil, 1 device plug

2/2-way-MAXI-Solenoid valve - servo-controlled - NC

normally closed - diaphragm made of NBR

brass blank

Circuit diagram:

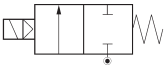

Order-no.	type	thread	DN mm	coil type	Δp in bar min	Δp in bar max ≈AC	Δp in bar max =DC	flow rate water kv (l/min)	flow rate gases 6 bar N (Nl/min)	VPE
23110500*	VFG-MAX-S220-3/8-NG-*	G3/8	12,7	C1	0,15	18	18	35	2229	1
23110501*	VFG-MAX-S220-1/2-NG-*	G1/2	12,7	C1	0,15	18	18	40	2547	1
23110504*	VFG-MAX-S220-3/4-NG-*	G3/4	19	C1	0,15	16	16	90	5732	1
23110503*	VFG-MAX-S220- 1 -NG-*	G1	25	C1	0,15	12	12	176	11209	1
23110506*	VFG-MAX-S220-1¼-NG-*	G1¼	37	C3	0,15	10	10	300	19106	1
23110507*	VFG-MAX-S220-1½-NG-*	G1½	37	C3	0,15	10	10	350	22290	1
23110508*	VFG-MAX-S220- 2 -NG-*	G2	50	C3	0,15	10	10	600	38212	1

* Please complete with the desired voltage (12V=, 24V=, 110V/50-60Hz oder 230V/50-60Hz).

2/2-way-MAXI-Solenoid valve - servo-controlled - NO

normally open - diaphragm made of NBR

brass blank

Circuit diagram:

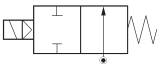

Order-no.	type	thread	DN mm	coil type	Δp in bar min	Δp in bar max ≈AC	Δp in bar max DC	flow rate water kv (l/min)	flow rate gases 6 bar N (Nl/min)	VPE
23110750*	VFG-MAX-S220-3/8-NO-*	G3/8	12,7	C1	0,15	18	18	35	2229	1
23110751*	VFG-MAX-S220-1/2-NO-*	G1/2	12,7	C1	0,15	18	18	40	2547	1
23110752*	VFG-MAX-S220-3/4-NO-*	G3/4	19	C1	0,15	16	16	90	5732	1
23110753*	VFG-MAX-S220- 1 -NO-*	G1	25	C1	0,15	12	12	176	11209	1
23110754*	VFG-MAX-S220-1¼-NO-*	G1¼	37	C3	0,15	10	10	300	19106	1
23110755*	VFG-MAX-S220-1½-NO-*	G1½	37	C3	0,15	10	10	350	22290	1
23110756*	VFG-MAX-S220- 2 -NO-*	G2	50	C3	0,15	10	10	600	38212	1

* Please complete with the desired voltage (12V=, 24V=, 110V/50-60Hz oder 230V/50-60Hz).

Further delivery variants: (Prices on request)

- other sealing materials (EPDM, FKM)
- deviating voltages
- EX-protected versions
- manual operation
- closing damping
- housing nickel plated
- stainless steel version

MAXI-Solenoid valve - force-controlled

G3/8 - G1

2/2-way-diaphragm solenoid valve, brass blank

Application: The solenoid valves are used where flowing media have to be released, blocked or by-passed. The actuating element is a solenoid.

Function: The pressure connection has to be attached according to the direction sign as shown in the sectional drawing so that the pressure is applied below the diaphragm. Through a small opening in the diaphragm (please look at the blow-up printing A) the present pressure flows slowly also into the upper part of the diaphragm which is additionally forced down to the housing seat by a spring.

As soon as the voltage is applied at the solenoid coil the armature system which is fixed with the diaphragm unit moves up and thus releases the passage. At the same time a bore inside the diaphragm unit is opened and by this supports the movement of the diaphragm. These valves are called force-controlled because the solenoid coil by itself is able to open the diaphragm. Thus with these valve types a pressure difference between inlet pressure and outlet pressure is not necessary.

Technical data

Connection	:	Withworth pipe thread - G3/8 up to G1
Design	:	poppet valve with cup gasket
Pressure range	:	0 up to 16 bar, **also suitable for vacuum**
Temperature range	:	NBR: -10°C up to +80°C, FKM and EPDM: -10°C up to +130°C
Mounting position	:	optional
Viscosity	:	max. 10 degrees E

Housing	armature guide tube	sealings
brass blank	stainless steel	NBR 70 (-10°C up to +80°C) EPDM (-10°C up to +130°C) FKM (-10°C up to +130°C)

Electrical data

Coil temp. class	:	F (+155°C)
Duty cycle	:	100 % ED
Protection class	:	IP 65 (with plug DIN 43650)

		AC current	DC current
Standard voltages	:	24 V, 110 V, 127 V, 220 V 50 Hz	12 V, 24 V, 110 V, 120 V, 220 V
Rated power	:	18 VA (holding) / 36 VA (pick-up)	14 W
Voltages tolerances	:	-15 % up to +10 % V	-5 up to +10 %

Dimensions NC

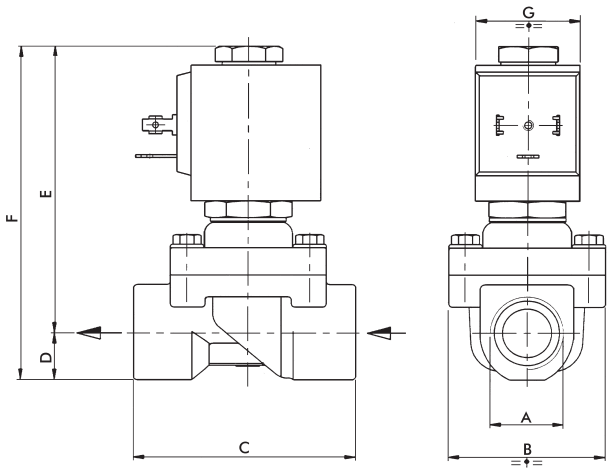

A	B	C	D	E	F	G	
						C1	C3
G3/8	45	64	14	82	96	30	36
G1/2	45	64	14	82	96	30	36
G3/4	54	82	17	88	105	30	36
G1	72,5	100	20	95	115		36

MAXI-Solenoid valve - force-controlled G3/8 - G1

2/2-way piston- and diaphragm solenoid valve - brass blank

Consisting of: 1 valve, 1 solenoid coil, 1 device plug

2/2-way-MAXI-Solenoid valve - force-controlled - NC

normally closed - piston made of NBR - for gases — 230 V/50 Hz

Circuit diagram:

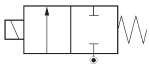

Order-no.	type	thread	DN mm	coil type	Δp in bar min	Δp in bar max	flow rate gases 6 bar N (Nl/min)	VPE
23110700-230/50	VFG-MAX-Z220-3/8-NG-230/50	G3/8	12,7	C3	0	10	2229	1
23110701-230/50	VFG-MAX-Z220-1/2-NG-230/50	G1/2	12,7	C3	0	10	2547	1
23110702-230/50	VFG-MAX-Z220-3/4-NG-230/50	G3/4	19,0	C3	0	8	5732	1
23110703-230/50	VFG-MAX-Z220-1-NG-230/50	G1	25,0	C4	0	7	11209	1

2/2-way-MAXI-Solenoid valve - force-controlled - NC

normally closed - piston made of NBR - for gases — 24V=

Circuit diagram:

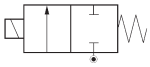

Order-no.	type	thread	DN mm	coil type	Δp in bar min	Δp in bar max	flow rate gases 6 bar N (Nl/min)	VPE
23110700-24V=	VFG-MAX-Z220-3/8-NG-24V=	G3/8	12,7	C4	0	10	2229	1
23110701-24V=	VFG-MAX-Z220-1/2-NG-24V=	G1/2	12,7	C4	0	12	2547	1
23110702-24V=	VFG-MAX-Z220-3/4-NG-24V=	G3/4	19	C4	0	8	5732	1
23110703-24V=	VFG-MAX-Z220-1-NG-24V=	G1	25	C4	0	4	11209	5

2/2-way-MAXI-Solenoid valve - force-controlled - NC

normally closed - diaphragm made of NBR - for liquids — 230 V/50 Hz

Circuit diagram:

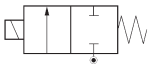

Order-no.	type	thread	DN mm	coil type	Δp in bar min	Δp in bar max	flow rate water kv (l/min)	VPE
23110713-230/50	VFG-MAX-ZM220-3/8-NG-230/50	G3/8	12,7	C4	0	10	35	1
23110714-230/50	VFG-MAX-ZM220-1/2-NG-230/50	G1/2	12,7	C4	0	10	40	1
23110715-230/50	VFG-MAX-ZM220-3/4-NG-230/50	G3/4	19,0	C4	0	7	90	1
23110716-230/50	VFG-MAX-ZM220-1-NG-230/50	G1	25,0	C4	0	7	176	1

2/2-way-MAXI-Solenoid valve - force-controlled - NC

normally closed - diaphragm made of NBR - for liquids — 24V=

Circuit diagram:

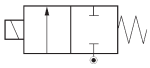

Order-no.	type	thread	DN mm	coil type	Δp in bar min	Δp in bar max	flow rate water kv (l/min)	VPE
23110713-24V=	VFG-MAX-ZM220-3/8-NG-24=	G3/8	12,7	C4	0	6	35	1
23110714-24V=	VFG-MAX-ZM220-1/2-NG-24=	G1/2	12,7	C4	0	6	40	1
23110715-24V=	VFG-MAX-ZM220-3/4-NG-24=	G3/4	19,0	C4	0	3	90	1
23110716-24V=	VFG-MAX-ZM220-1-NG-24=	G1	25,0	C4	0	2,5	176	1

Further delivery variants: (Prices on request)

- other sealing materials (EPDM, FKM)
- deviating voltages
- EX-protected versions
- manual operation
- closing damping
- housing nickel plated
- stainless steel version

MINI-Solenoid valve - directly operated G1/8 - G1/4

2/2-way and 3/2-way - brass blank

Function: With these solenoid valves only the solenoid system of the coil generates the necessary force for the opening or the closing.

With the 2/2-way valves the operating pressure above the seat sealing, supported by the closing spring, effects the sealing.

With the 3/2-way valves the sealing is effected only by the closing spring. The pressure is applied below the seat sealing. The performance of the valve depends on the interaction of the seat diameter, the pressure and the magnetic force.

Technical data

Connection	:	Withworth pipe thread - G1/8 and G1/4
Design	:	Poppet valve with sealing in the armature
Pressure range	:	see table, **also suitable for vacuum**
Temperature range	:	NBR: -10°C up to +80°C, EPDM: -10°C up to +130°C, FKM: -10°C up to +130°C
Mounting position	:	optional
Viscosity	:	max. 2,5 degrees E

Housing	armature guide tube	sealings	medium
brass	stainless steel	NBR (-10°C up to +80°C)	air, water, inert gas, oil, heating oil
		EPDM (-10°C up to +130°C) (ungünstig for Öle)	hot water, steam,
		FKM (-10°C up to +130°C)	aggressive media, hot air (for chlorinated solutions max. 70°C)

Electrical data

Coil temp. class	:	F (+155°C)
Duty cycle	:	100 % ED
Protection class	:	IP 65 (with plug DIN 43650)
voltages tolerances	:	AC current: -15 % up to +10 %
		DC current: -5 % up to +10 %

Dimensions NC G1/8

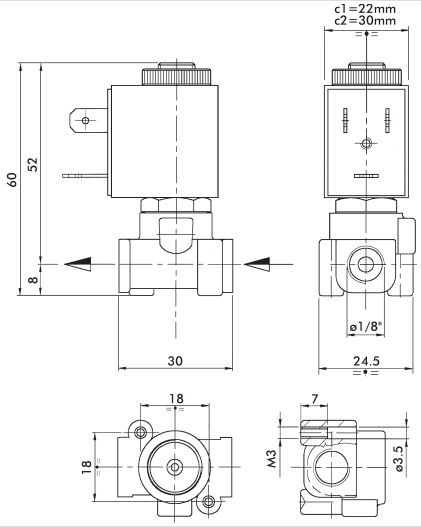

Dimensions NC G1/4

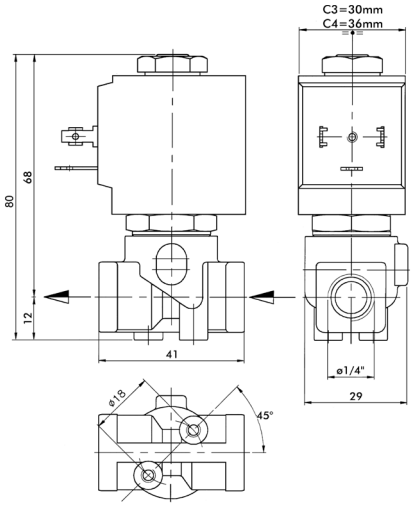

Dimensions NO G1/8

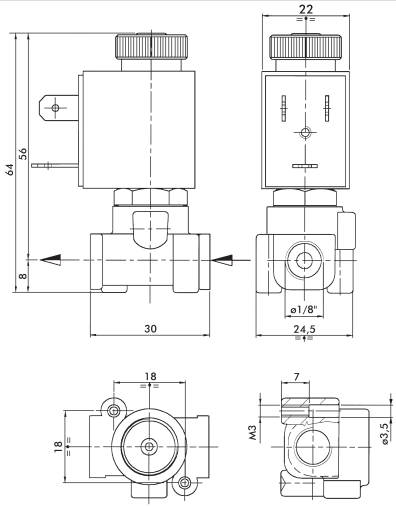

Dimensions NO G1/4

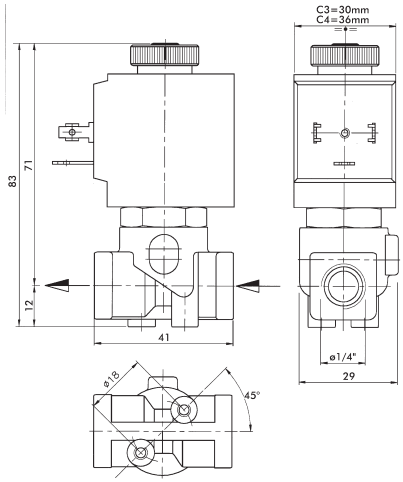

V10

MINI-Solenoid valve - directly operated G1/8 - G1/4

2/2-way - brass blank

Series V10

Consisting of: 1 valve, 1 solenoid coil, 1 device plug

2/2-way-MINI-Solenoid valve - directly operated - NC

normally closed - diaphragm made of NBR

Circuit diagram:

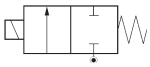

Order-no.	type	thread	DN	coil	Δp in bar			flow rate	flow rate	VPE
					min	max		water	gases 6 bar	
			mm	type		≈AC	DC	kv (l/min)	N (Nl/min)	
23110605*	VFG-MIN-D220-2,0-1/8-NG-*	G1/8	2	C1	0	12	10	1,5	96	1
23110612*	VFG-MIN-D220-2,5-1/4-NG-*	G1/4	2,5	C3	0	16	14	2,5	159	1
23110613*	VFG-MIN-D220-3,5-1/4-NG-*	G1/4	3,5	C3	0	10	8	5,4	344	1

* Please complete with the desired voltage (12V=, 24V=, 110V/50-60Hz oder 230V/50-60Hz).

1/8"

1/4"

2/2-way-MINI-Solenoid valve - directly operated - NO

normally open - diaphragm made of NBR

Circuit diagram:

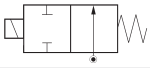

Order-no.	type	thread	DN	coil	Δp in bar			flow rate	flow rate	VPE
					min	max		water	gases 6 bar	
			mm	type		≈AC	DC	kv (l/min)	N (Nl/min)	
23110632*	VFG-MIN-D220-2,0-1/8-NO-*	G1/8	2	C1	0	9	5	1,7	108	1
23110642*	VFG-MIN-D220-2,5-1/4-NO-*	G1/4	2,5	C3	0	12	12	2,2	140	1
23110643*	VFG-MIN-D220-3,5-1/4-NO-*	G1/4	3,5	C3	0	7	7	4,9	312	1

* Please complete with the desired voltage (12V=, 24V=, 110V/50-60Hz oder 230V/50-60Hz).

1/8"

1/4"

V10

MINI-Solenoid valve - directly operated G1/8 - G1/4

3/2-way - brass blank

Consisting of: 1 valve, 1 solenoid coil, 1 device plug

Dimensions NC - G1/8

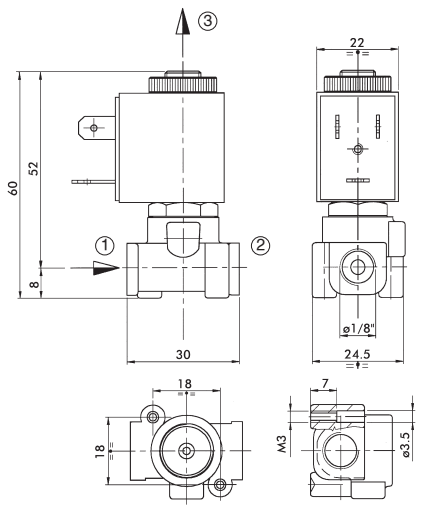

Dimensions NC - G1/4

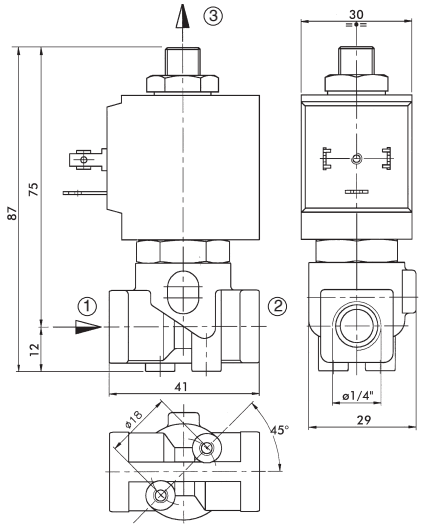

Dimensions NO - G1/8

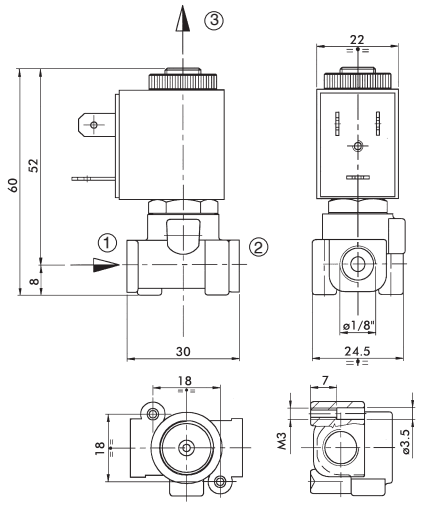

Dimensions NO - G1/4

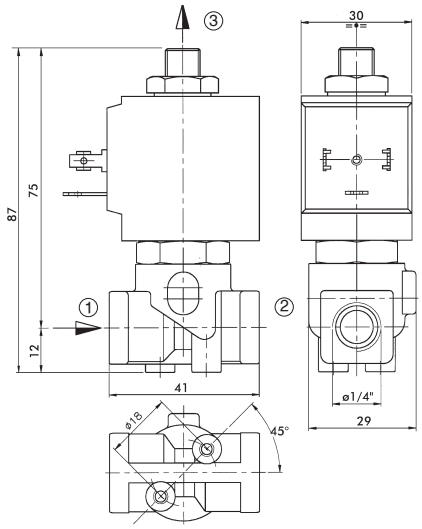

V10

3/2-way-MINI-Solenoid valve - directly operated - NC

normally closed - diaphragm made of NBR

1/8"

Circuit diagram:

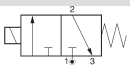

Order-no.	type	thread	DN	coil	Δp in bar min	Δp in bar max ≈AC	Δp in bar max DC	flow rate water kv (l/min)	flow rate gases 6 bar N (Nl/min)	VPE
			mm	type						
23110851*	VFG-MIN-D320-1,5-1/8-NG-*	G1/8	1,5	C1	0	10	10	1	64	1
23110861*	VFG-MIN-D320-2,5-1/4-NG-*	G1/4	2,5	C3	0	10	10	2,3	146	1

* Please complete with the desired voltage (12V=, 24V=, 110V/50-60Hz oder 230V/50-60Hz).

3/2-way-MINI-Solenoid valve - directly operated - NO

normally open - diaphragm made of NBR

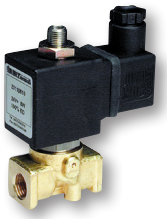

1/4"

Circuit diagram:

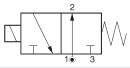

Order-no.	type	thread	DN	coil	Δp in bar min	Δp in bar max ≈AC	Δp in bar max DC	flow rate water kv (l/min)	flow rate gases 6 bar N (Nl/min)	VPE
			mm	type						
23110440*	VFG-MIN-D320-1,5-1/8-NO-*	G1/8	1,5	C1	0	10	10	1	64	1
23110460*	VFG-MIN-D320-2,4-1/4-NO-*	G1/4	2,5	C3	0	9	9	2,2	140	1

* Please complete with the desired voltage (12V=, 24V=, 110V/50-60Hz oder 230V/50-60Hz).

Technical data

Connection	:	Withworth pipe thread - G1/8 and G2
Design	:	Poppet valve with sealing in the armature
Pressure range	:	see table
Temperature range	:	-10°C up to +130°C
Mounting position	:	optional
Viscosity	:	max. 2,5 degrees E

Housing	armature guide tube	sealings	medium
stainless steel	stainless steel	FKM	air, water, inert gas, oil, fuel oil, hot water, steam (unfavorable for oils), aggressive media, hot air (for chlorinated solutions max. 70°C)

Electrical data

Coil temp. class	:	F (+155°C)
Duty cycle	:	100 % ED
Protection class	:	IP 65 (with plug DIN 43650)
voltages tolerances	:	AC current: -15 % up to +10 % DC current: -5 % up to +10 %

2/2-way-MAXI-Solenoid valve - servo-controlled - NC

normally closed - diaphragm made of FKM

stainless steel

Circuit diagram:

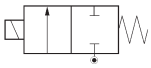

Order-no.	type	thread	DN mm	Δp in bar min	Δp in bar max ≈AC	Δp in bar max DC	flow rate water kv (l/min)	flow rate gases 6 bar N (Nl/min)	VPE
23620020	VSA-MAX-S221-13-1/2-NG-220V-AC-VA-FKM	G1/2	13	0,5	16	16	65	4140	1
23620021	VSA-MAX-S221-13-1/2-NG-24V-DC-VA-FKM	G1/2	13	0,5	16	16	65	4140	1
23620022	VSA-MAX-S221-20-3/4-NG-220V-AC-VA-FKM	G3/4	20	0,5	16	16	110	7006	1
23620023	VSA-MAX-S221-20-3/4-NG-24V-DC-VA-FKM	G3/4	20	0,5	16	16	110	7006	1
23620024	VSA-MAX-S221-25-1-NG-220V-AC-VA-FKM	G1	25	0,5	16	16	173	11018	1
23620025	VSA-MAX-S221-25-1-NG-24V-DC-VA-FKM	G1	25	0,5	16	16	173	11018	1
23620026	VSA-MAX-S221-35-1 1/4-NG-220V-AC-VA-FKM	G1¼	35	0,5	16	16	317	20189	1
23620027	VSA-MAX-S221-35-1 1/4-NG-24V-DC-VA-FKM	G1¼	35	0,5	16	16	317	20189	1
23620028	VSA-MAX-S221-40-1 1/2-NG-220V-AC-VA-FKM	G1½	40	0,5	16	16	432	27513	1
23620029	VSA-MAX-S221-40-1 1/2-NG-24V-DC-VA-FKM	G1½	40	0,5	16	16	432	27513	1
23620030	VSA-MAX-S221-50-2-NG-220V-AC-VA-FKM	G2	50	0,5	16	16	692	44072	1
23620031	VSA-MAX-S221-50-2-NG-24V-DC-VA-FKM	G2	50	0,5	16	16	692	44072	1

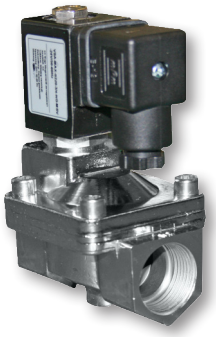

Dimensions

	D	A	B	H
23620020	G1/2	66	48	112
23620021	G1/2	66	48	112
23620022	G3/4	75	58	118
23620023	G3/4	75	58	118
23620024	G1	96	70	131
23620025	G1	96	70	131
23620026	G1¼	131	96	146
23620027	G1¼	131	96	146
23620028	G1½	131	96	146
23620029	G1½	131	96	146
23620030	G2	165	120	167
23620031	G2	165	120	167

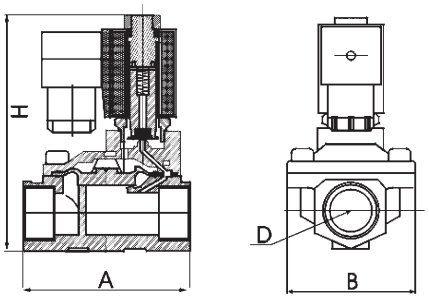

V10

2/2-way-MINI-Solenoid valve - directly operated - NC

normally closed - diaphragm made of FKM

stainless steel

Circuit diagram:

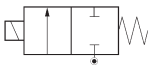

Order-no.	type	thread	DN mm	Δp in bar min	Δp in bar max ≈AC	Δp in bar max DC	flow rate water kv (l/min)	flow rate gases 6 bar N (Nl/min)	VPE
23620001	VSA-MIN-D221-3,0-1/8-NG-220V-AC-VA-FKM	G1/8	3	0	13	13	3	191	1
23620002	VSA-MIN-D221-3,0-1/8-NG-24V-DC-VA-FKM	G1/8	3	0	13	13	3	191	1

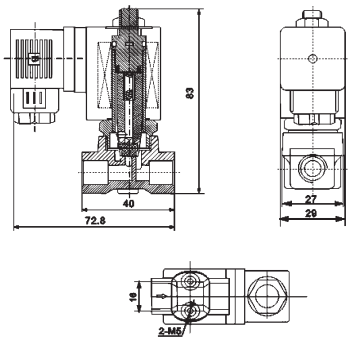

Device socketn f. MAXI- u. MINI-solenoid coil

PG 9

Technical data

Maximum voltage	:	250 WS/300 V GS
Maximum current	:	16 A
Operating current	:	10 A
Max. conductor cross-section	:	1,5 mm²
Cable diameter	:	PG 9 = 6-8 mm PG 11 = 8-10 mm
Protection class	:	IP 65 DIN 40 050
Insulation class	:	C - VDE 0110
Operating temperature	:	-30°C up to +125°C

Housing	Contact carrier and nut
black: PA + 30% GF transparent: polyamide	PA + 30% GF

Contact material	Sealing
CuZn (Ag)	thermoplastic rubber

Dimensions **design B**

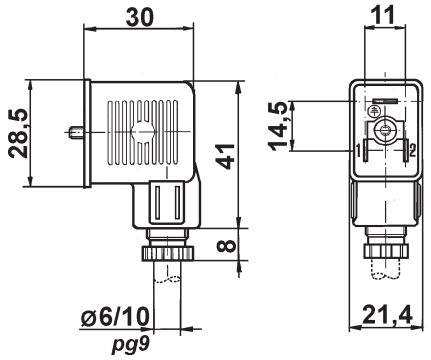

design A

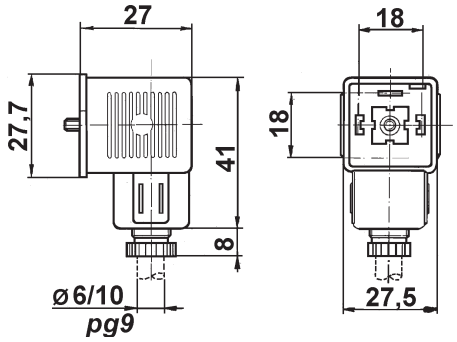

Device socket standard for solenoid coil - C1

DIN 43650 B - industrial design 22 mm (narrow coil) — design B

Order-no.	type	for coiltyp	VPE
23100262	V-GST-BIF100	C1	1

Device socket standard for solenoid coil - C3 u. C4

DIN 43650 A 27 mm (narrow coil) — design A

V10

Order-no.	type	for coiltyp	VPE
23100267	V-GST-A100	V-GST-A100	1

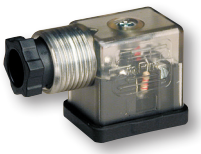

Device socket with LED for solenoid coil - C1

DIN 43650 B - industrial design 22 mm (narrow coil) — design B with protective circuit

Order-no.	type	for coiltyp	for voltage	color LED	VPE
23100265	V-GST-BIF101-24V=LED-Varistor	C1	10-50V	Rot	1
23100266	V-GST-BIF101-220-LED-Varistor	C1	70-250V	Rot	1

Device socket with LED for solenoid coil - C3 u. C4

DIN 43650 A – 27 mm (narrow coil) — design A with protective circuit

Order-no.	type	for coiltyp	for voltage	color LED	VPE
23100263	V-GST-A101-24V=LED-Varistor	C3 / C4	10-50V	Rot	1
23100264	V-GST-A102-220-LED-Varistor	C3 / C4	70-250V	Rot	1

Spare solenoid coil for MAXI-/MINI-Solenoid valves

Function: The solenoid coils are designed for continuous operation with the specified nominal voltages and, unless otherwise noted, covered with synthetic material with high thermal and mechanical resistance. The standard series are provided with an electrical connection for device plug DIN 43650.
With mounted device plug the protection class according to DIN 40050 in IP 65 is fulfilled.

Technical data

	frequency	voltage	tolerances voltage	tolerances frequency
AC current (C3u.C4)	50 Hz	24, 110, 230 V	-15 % +10 %	-3 % +3 %
AC current (C1)	60 Hz	24, 110, 230 V	-15 % +10 %	-3 % +3 %
DC current	-	12, 24 V	-5 % +10 %	-

Standard-rated power

	AC current holding	AC current pick-up	DC current operation
coil series C1	12 VA	8 VA	5,5 W
coil series C3	20 VA	13 VA	8 W
coil series C4	40 VA	22 VA	27 W

Dimensions **V-MAX-Coil-C1**

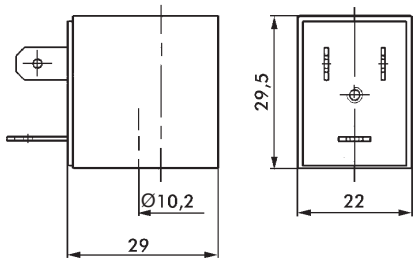

V-MAX-Coil-C3/C4

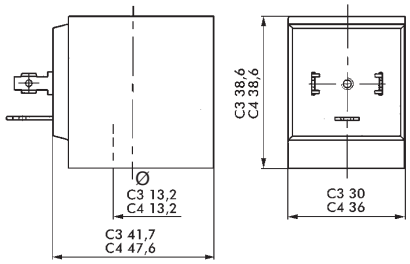

Spare solenoid coil
Class „F" (155°C)

TYP C1
100% ED

Order-no.	type	coil type	voltage	current consumption ≈AC (VA) pick-up	current consumption ≈AC (VA) holding	current consumption =DC (W)	voltage tolerance in %	VPE
23110802	VFG-Spule-22-C1-12V=	C1	12=	-	-	5,5	+10 - 5	1
23110800	VFG-Spule-22-C1-24V=	C1	24=	-	-	5,5	+10 - 5	1
23110804	VFG-Spule-22-C1-24/50-60	C1	24/50-60Hz	12	8	-	+10 -15	1
23110803	VFG-Spule-22-C1-110/50-60	C1	110/50-60HZ	12	8	-	+10 -15	1
23110801	VFG-Spule-22-C1-230/50	C1	230/50-60HZ	12	8	-	+10 -15	1

Spare solenoid coil
Class „F" (155°C)

TYP C3
100% ED

V10

Order-no.	type	coil type	voltage	current consumption ≈AC (VA) pick-up	current consumption ≈AC (VA) holding	current consumption =DC (W)	voltage tolerance in %	VPE
23110812	VFG-Spule-30-C3-12V=	C3	12=	-	-	8	+10 - 5	1
23110810	VFG-Spule-30-C3-24V=	C3	24=	-	-	8	+10 - 5	1
23110816	VFG-Spule-30-C3-24/50	C3	24/50Hz	20	13	-	+10 -15	1
23110813	VFG-Spule-30-C3-110/50	C3	110/50Hz	20	13	-	+10 -15	1
23110811	VFG-Spule-30-C3-230/50	C3	230/50Hz	20	13	-	+10 -15	1

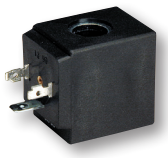

Spare solenoid coil
Class „H" (180°C)

TYP C4
100% ED

Order-no.	type	coil type	voltage	current consumption ≈AC (VA) pick-up	current consumption ≈AC (VA) holding	current consumption =DC (W)	voltage tolerance in %	VPE
23110814	VFG-Spule-30-C4-12=	C4	12=	-	-	27	+10 - 5	1
23110815	VFG-Spule-30-C4-24=	C4	24=	-	-	27	+10 - 5	1
23110817	VFG-Spule-30-C4-230/50	C4	230/50Hz	40	22	-	+10 -15	1

Notes